C 51.17/12:990/3

Tech Notes

March 1990

PB90-925903

Technology fact sheets from Federal laboratories

NTIS

U.S. DEPARTMENT OF COMMERCE
National Technical Information Service
Center for the Utilization of Federal Technology

U.S. DEPARTMENT OF COMMERCE
Robert A. Mosbacher, Secretary of Commerce

National Technical Information Service
Joseph F. Caponio, Director

ISSN 0889-8464

COPYRIGHT WARNING
International Copyright © National Technical Information Service, 1990. All portions of this publication are protected against copying or other reproduction outside of the United States under the provisions of Article II of the Universal Copyright Convention. United States copyright is not asserted under the United States Copyright Law, Title 17, United States Code.

The Secretary of Commerce has determined that the publication of this periodical is necessary in the transaction of the public business required by law of this department. Use of funds for printing this periodical has been approved by the Director of the Office of Management and Budget through 1990.

Tech Notes

Highlighting Selected U.S. Government Technology & Resources

March 1990

Contents

PENNSYLVANIA STATE UNIVERSITY

MAR 26 1990

DOCUMENTS COLLECTION
U.S. Depository Copy

Agriculture & Food 212

Computers 218

Electrotechnology 224

Energy 235

Engineering 238

Environmental Science & Technology 262

Manufacturing, Machinery & Tools 263

Materials 274

Medicine & Biology 288

Natural Resources Technology & Engineering 295

Physical Sciences 297

Transportation & Components 306

Published monthly by the National Technical Information Service (NTIS), Tech Notes bring together individual one- to two-page fact sheets prepared by Federal agencies, their laboratories, or contractors. These fact sheets highlight current Federal technology determined to have commercial or practical application. Topics cover new processes, materials, techniques, software, instrumentation, and resources.

Some of the current sources are the Department of the Navy, Department of the Army, NASA, Department of Energy, Environmental Protection Agency, Department of the Interior, and the Department of Agriculture.

Special assistance is provided by the Federal Laboratory Consortium.

Change of address or questions concerning subscriptions should be sent to:
Subscriptions Department
National Technical Information Service
Springfield, VA 22161
(703) 487-4630

Suggestions, comments, or questions concerning Tech Notes should be directed to:
Tech Notes Editor
Room 300B F
National Technical Information Service
Springfield, VA 22161
(703) 487-4805

How to Use Tech Notes

Every Tech Notes fact sheet lists a source for additional information. The source of this information may be a special support package from the originating agency, a personal contact, a licensing opportunity, or a backup report available from NTIS.

Each fact sheet also is perforated to allow for easy removal for those subscribers who may wish to keep a special fact sheet file or route to others in their organization

Sources of Further Backup Information

Below are two representative examples of how each Tech Note fact sheet provides you with a source of further information. In most cases, this information is provided directly by the agency or its laboratory. However, there are cases where NTIS is the source for backup documentation. In these cases, use the order form at the end.

Examples:

significant distance from the endwalls. Therefore, a radial variation in efficiency should be used when designing small stators.
Project Officer Jeffrey E. Haas
(216) 433-4000.

FOR ADDITIONAL INFORMATION

You can learn more about this technology by ordering the NTIS report(s):
Cold-Air Performance of Compressor Drive Turbine
Order number: AD-A101066/NAA
Price code: A02
Order from:
National Technical Information Service
5285 Port Royal Road
Springfield, VA 22161
(703) 487-4650

158

Agency contact who can supplement the information contained in the backup report.

NTIS Order Number*

NTIS Price Code*

* See the order form and price code table at the end of the issue.

Suggested applications include other kinds of refrigerators, heat engines, thermal instrumentation, and heat switches.
This work was done by Emanuel Tward of Caltech for NASA's Jet Propulsion Laboratory.
NPO-15479/TN

FOR ADDITIONAL INFORMATION
Contact: Director, Technology Transfer Division, P.O. Box 8587, BWI Airport, MD 21240: (301) 621-0100 Ext.241.
REFER TO THE NUMBER LISTED AT THE END OF THE ARTICLE

178

Agency reference number

Source of more information about the technology described in the fact sheet

Page number

Tech Notes Title List for March 1990

Agriculture & Food

0212 Carbonated Beverage Tablet or Powder

0213 Peach Odors

0214 Seeds Stored Safely Under Laughing Gas

0215 Underground Microbes Counter Chemicals

Software

0216 Computerized 'Crystal Ball' for Wheat Growth

Testing & Instrumentation

0217 Testing for Natural Herbicides

Computers

0218 ARCNET Redundant Hub

0219 Data Acquisition and Reduction Processor

0220 Integrated Refractive Effects Prediction System (Licensing Opportunity)

0221 Hyperswitch Network for Hypercube Computer—Data-driven dynamic switching enables high speed data transfer. (Licensing Opportunity)

Software

0222 Variable-Metric Algorithm for Constrained Optimization—A function is minimized subject to equality and inequality constraints.

Testing & Instrumentation

0223 Method and Device for Measuring Resistivity (Licensing Opportunity)

Electrotechnology

0224 Fiber Optics

0225 Leadless Chip Carrier

0226 Very High Speed Integrated Circuit (VHSIC)

0227 Polarized Rotary Solenoid

0228 Adaptive Telemetry Multiplexer—Data-acquisition characteristics can be changed as conditions change. (Licensing Opportunity)

0229 Digital Signal Processor for GPS Receivers—Features include reliability and compactness. (Licensing Opportunity)

0230 Radiation Damage in Advanced Bipolar Transistors—The degradation of current gain is measured.

0231 Simple Multiplexing Hand-Held Control Unit—The circuit contains only switches and resistors and requires only two connecting wires.

0232 Single Electrode Would Control Charge-Coupled Device—Space would be saved and interelectrode short circuits eliminated.

0233 SQUID With Integral Flux Concentrator—A slotted superconducting disk concentrates magnetic flux from an external coil. (Licensing Opportunity)

0234 VLSI Universal Noiseless Coder—Features would include reliability, low weight and power, and small volume.

Other Items of Interest

0263 Neutral Format for HMA Manufacturers

0276 Thermoplastic Enclosures for Avionics

Energy

0235 Solar Photovoltaic Module Achieves Record 20% Efficiency

0236 Fast Reacting Solar Heat Collector Designed: Double-Glased Insulated Box

0237 Zero-Gravity Fuel-Cell Product-Water Accumulator—Water is removed from the fuel cell by capillary action.

Engineering

0238 Integral Structural Damping

0239 2 Degrees-Kelvin Technology

0240 Superfluid Check Valve

0241 Drill-Split Fragmentation-A New Primary Excavation Method

0242 Fire Endurance of Paneled Steel Stopping Evaluated

0243 High-Pressure Inward-Facing Drum Sprays Reduce Dust Levels on Longwall Mining Sections

0244 Freezer Alarm (Licensing Opportunity)

0245 Metallized Synthetic Cables (Licensing Opportunity)

0246 Security Device for Safes (Licensing Opportunity)

0247 Method of Determining the Orientation of a Moving Platform

0248 Applying Thermal Gradients to Control Vibrations—Thermal actuators might be used to stabilize large structures.

0249 Capillary-Pumped Heat-Transfer Loop—A new system offers advantages of a heat pipe without its limitations.

0250 Cryogenic Shutter Mechanism—A device minimizes heating by external and internal sources. (Licensing Opportunity)

0251 Effects of Turbulence on Ignition—The enhancement of evaporation by turbulence could be used to enhance ignition.

0252 Glove Box for Hazardous Liquids-A conceptual box is designed for safe handling and cleaning.

Engineering (Cont.)

0253 Honeycomb-Fin Heat Sink—This strong, lightweight part increases the effectiveness of forced-air cooling. (Licensing Opportunity)

0254 Two-Pipe Heat-Transfer Loop—Liquid and vapor travel in separate tubes.

Software

0255 MIDAS Program Aids Designer in Creating Fleet Mooring Assemblies on Computervision

0256 Calculating Transonic Flows About Airfoils—Small disturbances and aeroelastic effects can be simulated.

Testing & Instrumentation

0257 Simulator of Rain in Flowing Air—Drops are injected into slowly flowing air, which is then accelerated.

0258 Instrumentation System for Precision Measurements of Flow Vectors

0259 Fiber Optic Probe for Measuring Downhole Detonation Time and Velocity

0260 Subminiature Hot-Wire Probes—Flows can be measured with higher resolutions.

0261 High-Temperature Strain-and-Temperature Gauge—A two-element gauge is used alternately in two different bridge circuits to measure both temperature and strain.

Other Items of Interest

0267 Convergent-Filament Nonmechanical Pump—The restrictions imposed by capillaries are avoided.

0273 Polymeric Electrolytic Hygrometer for Harsh Environments—An improved design reduces vulnerability to organic vapors and dust.

0278 Fracture-Mechanics Analysis on a Distributed-Memory Parallel Processor

Environmental Science & Technology

0262 Soil Sampling Quality Assurance User's Guide-Second Edition

Other Items of Interest

0302 Evaluation of HCl Continuous Emission Monitors

0298 MIPROPS Program Now Available Online, Worldwide

Manufacturing, Machinery & Tools

0263 Neutral Format for HMA Manufacturers

0264 Ion Beam Lithography

0265 Rational Design System for Material Processing

0266 Charpy V-Notch Impact Test Program

0267 Convergent-Filament Nonmechanical Pump—The restrictions imposed by capillaries are avoided.

0268 Oxygen-Free Rinse Water for Electroplating—Deionized water through which nitrogen has been bubbled promotes a strong plated-metal bond.

0269 Multihole Arc-Welding Orifice—A simple modificaiton of the welding torch improves the quality of welds.

Software

0270 Tough Automation Decision Made Easier With New Software

Testing & Instrumentation

0271 Acid Test for Annealing of Welds—A solution changes color if the heat-treated condition has been lost.

0272 Optoelectronic System Would Measure Profiles of Welds—Less inspection time and effort would be required.

0273 Polymeric Electrolytic Hygrometer for Harsh Environments—An improved design reduces vulnerability to organic vapors and dust.

Materials

0274 Synthetic Down Replacement for Thermal Insulation

0275 Transformation-Toughened Zirconia

0276 Thermoplastic Enclosures for Avionics

0277 Zytel-330 Plastic Material

0278 Fracture-Mechanics Analysis on a Distributed-Memory Parallel Processor

0279 New Applications of Silicon Micromachining

0280 'HIPing': From Metal Powders to Reliable Materials

0281 Alumina for Deep-Sea Service

0282 Piecewise-Linear Computation of Creep—An analogy is drawn between thermal and creep strains.

0283 Surrogate Seeds for Growth of Crystals—Larger crystals of higher quality can be grown.

0284 Temperature Dependence of Elastic Constants of Polymers—The theory of small elastic deformations of disordered solids at low temperatures is extended.

Testing & Instrumentation

0285 Electrostatic Measurement of Materials Containing Conductive Fibers

0286 Analytical Instrumentation Method for Inert Gases in Alloy Powders (Licensing Opportunity)

0287 Accelerated Testing of Photothermal Degradation of Polymers—Arrhenius plots reveal maximum safe temperatures.

Medicine & Biology

0288 New Application of an Ion-Exchange Membrane

0289 Diagnostic Research and Clinical Laboratory Program

0290 Genetic Data Base Service

0291 Effectively Designing Computerized Work Stations

0292 Laboratory Animal Diagnostic Resource

0293 National Vibrating Probe Facility Offers Ion-Specific Vibrating Probe

0294 Controlled-Turbulence Bioreactors—Two versions provide conditions for growth and long life of cells. (Licensing Opportunity)

Other Items of Interest

0215 Underground Microbes Counter Chemicals

Natural Resources Technology & Engineering

0295 Core Shows Scientific Value of Diamond Core Drilling

Testing & Instrumentation

0296 Measuring Winds With Pulsed C-Band Radar—The objective is to provide quick forecasts of impending thunderstorms. (Licensing Opportunity)

Physical Sciences

0297 Organotin Compounds (Licensing Opportunity)

0298 MIPROPS Program Now Available Online, Worldwide

0299 Compact Apparatus Grows Protein Crystals—A pair of syringes with ganged plungers produce crystals by hanging-drop method. (Licensing Opportunity)

0300 Making Excited Oxygen Molecules and Atoms—Excited oxygen should enable oxidation of semiconductors and superconductors at relatively low temperatures. (Licensing Opportunity)

0301 Q-Switch for Self-Injection Locking of Laser—The spectral width and pulse time would be regulated. (Licensing Opportunity)

Testing & Instrumentation

0302 Evaluation of HCl Continuous Emission Monitors

0303 Improved Oxygen Monitor for Use in a Radiation Environment

0304 Speckle-Suppression Apparatus—Multiple delays reduce speckle in an unmodulated laser pulse.

0305 High-Resolution, Two-Wavelength Pyrometer—Optical and electronic parts of a commercial instrument are modified.

Other Items of Interest

0237 Zero-Gravity Fuel-Cell Product-Water Accumulator—Water is removed from the fuel cell by capillary action.

0251 Effects of Turbulence on Ignition—The enhancement of evaporation by turbulence could be used to enhance ignition.

0286 Analytical Instrumentation Method for Inert Gases in Alloy Powders (Licensing Opportunity)

0288 New Application of an Ion-Exchange Membrane

0273 Polymeric Electrolytic Hygrometer for Harsh Environments—An improved design reduces vulnerability to organic vapors and dust.

Transportation & Components

0306 Interaction of a Helicopter Blade With a Vortex—Measurements in a wind tunnel yield data for validation of computations.

Agriculture & Food

0212 Carbonated Beverage Tablet or Powder

0213 Peach Odors

0214 Seeds Stored Safely Under Laughing Gas

0215 Underground Microbes Counter Chemicals

Software

0216 Computerized 'Crystal Ball' for Wheat Growth

Testing & Instrumentation

0217 Testing for Natural Herbicides

U.S. Army Research

U.S. Army Natick RD&E Center, Natick, MA 01760

Carbonated Beverage Tablet or Powder

The U.S. Navy has a requirement for an alternative method of providing carbonated beverages to shipboard personnel. Current methods of providing onboard beverages are plagued with logistical problems, such as, cleaning and maintaining carbonated dispensing units, providing sanitation in dispensing areas, storing and transporting CO2 cylinders, storing and disposing of beverage cans.

The U.S. Army Natick Research, Development and Engineering Center is currently developing carbonated beverage powders or tablets to address these problems. Marketing analysis results indicate that cola, orange, lemon-lime and root beer are the most preferred carbonated beverage; therefore, all development efforts are including at least these four flavors. The basic formulation includes the following ingredients: acid, bicarbonate, sweetener, flavorant and colorant. The powder, when mixed with ice water, should give an acceptable carbonated beverage that resembles a canned or bottled product.

This method of providing a carbonated beverage will reduce the logistical burden associated with conventional carbonated beverages and result in substantial savings to the Navy in labor, storing, transporting and disposal expenses. Even though originally intended for military procurement, the carbonated beverage powder or tablet has potential for commercial application where dispensing, storing, transporting or disposal are a problem.

If you are interested in receiving additional information on the status of this project, contact:

Mr. Frank DiLeo
U.S. Army Natick RD&E Center
ATTN: STRNC-WTP
Natick, MA 01760-5018
TEL: 508-651-4474

or

Mr. Robert Rosenkrans
Technology Transfer Coordinator
U.S. Army Natick RD&E Center
ATTN: STRNC-EMP
Natick, MA 01760-5014
TEL: 508-651-5296

Peach Odors

Ferreting out what it is in a sweet, tree-ripened peach that makes it smell so mouth-watering good and why a store-bought peach can smell so much less peachy has been a goal of Agricultural Research Service chemists Robert J. Horvat, James A. Robertson, and Glenn W. Chapman, Jr. They are part of the Horticultural Crops Quality Research Laboratory in Athens, Georgia.

"We've identified five specific compounds from tree-ripened fruit that, mixed together in the right quantities, are essential to create what our smell panelists call the peach odor," says Horvat.

These peach-smelling compounds are two 6-carbon aldehydes, a terpene, linalool, and gamma-decalactone, a 10-carbon lactone, each present in quantities measured only in parts per billion.

The smell panels were informal, but they were made up of people who deal with odor chemistry. "And they worked from the freshest possible peaches," Horvat says. "For them to get the best peach smell, we found the peach really had to be less than 4 hours from the tree."

After even just 4 hours, they were able to smell differences from the ideal aroma.

But commercially, most peaches must be picked a little on the green side so they can be shipped to market before they get overly soft.

When the researchers looked at peaches shipped this way, they found a totally different profile for the five essential aroma compounds.

"It wasn't so much that any were missing as they were in a different combination of concentrations," Horvat says. "In particular, there was a much lower concentration of the two aldehydes."

Now that Horvat has isolated what the essential compounds are in peaches as far as aroma, he hopes to pin down the point at which peaches on the tree start approaching that profile.

Eventually he hopes to make recommendations for when peaches should be picked for the best compromise between shelf life and aroma.

But for real peach aficionados, the only way to get a perfect-smelling peach may be a peach tree in the backyard.

To discuss this effort further, contact: Robert J. Horvat is in the USDA-ARS Horticultural Crops Quality Research Laboratory, P.O. Box 5677, Athens, GA 30613 (404)546-3319.

Seeds Stored Safely Under Laughing Gas

Sharon Sowa's search for newer and better ways to preserve seeds has turned up some usual tools - such as laughing gas.

Sowa, an Agricultural Research Service chemist, is encouraged by the early results of her nitrous oxide experiments and will be investigating other gases to find ones best suited for storing seeds.

"It's insurance against their extinction and keeps seeds available to breed agricultural plants for drought tolerance, disease resistance, and other traits," says Sowa. Using nitrous oxide, Sowa slowed respiration in the cells of snap beans by 35 percent, enough to anesthetize the seeds. Air that's 80 percent nitrous oxide - a component in human anesthetic - was blown over the seeds. Thirty minutes later she began reviving them from their nap.

Sowa, at ARS' National Seed Storage Laboratory in Fort Collins, Colorado, spelled out her goal: "to treat seeds someday much like doctors treat their patients in surgery. Anesthetics are used to slow human respiration during surgery. They also slow the life processes inside seeds."

Most seeds can be stored safely either in temperature-controlled rooms or frozen in liquid nitrogen. But that's not the case for seeds that come mainly from tropical and subtropical plants such as passion fruit and macadamia.

"These seeds are usually large and contain up to 50 percent moisture compared with about 10 percent for most vegetable seeds," Sowa explains. "They can't be dried, so their high moisture content results in a short storage life."

Sowa says nitrous oxide is what scientists call a "permeable molecule" - it goes in and out of plant calls very easily, without causing any damage. Exactly how it works to slow respiration in humans and seeds is unknown.

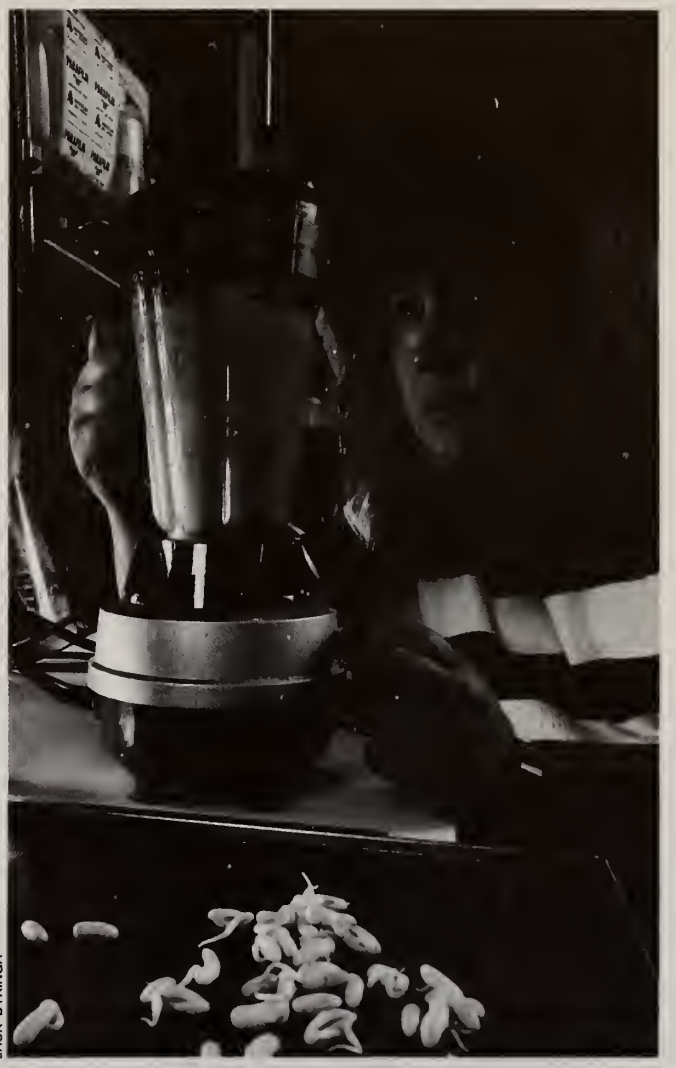

JACK DYKINGA

Chemist Sharon Sowa prepares subcellular bean seedling extract for respiration measurement as part of her studies on seed deterioration and genetic changes during storage. (K3049-4)

"We also are looking for ways to store citrus and other tree crops," she says. Currently, we must keep trees growing in orchards if we want to preserve their unique genetic traits for future breeding experiments.

"If just a few cells or buds from these trees could be anesthetized, then regrown into trees when a tree breeder needed them, we would have a much cheaper and safer way to store them."

The National Seed Storage Laboratory's mission is to keep and preserve the 240,000 accessions now in cold storage at Fort Collins. Limited numbers of seeds are sent out on request to breeders and scientists in the United States and throughout the world.

FOR ADDITIONAL INFORMATION: A copy of the report is available from NTIS, Springfield, VA 22161; (703)487-4600.

Sharon Sowa is in USDA-ARS Plant Germplasm Preservation Research, Fort Collins, CO 80523; (303)484-0402.

Research Technology
Agricultural Research Service
U.S. Department of Agriculture

Underground Microbes Counter Chemicals

The unseen armies of microorganisms maneuvering beneath the soil's surface may have some surprise recruits.

Soil microorganisms play a major role in breaking down or degrading agricultural chemicals. The microorganisms' enzymes nibble away at herbicide molecules, typically changing them to a less harmful substance.

As chemicals wend their way closer to underground water supplies, however, this activity seems to slow. Scientists have attributed this to smaller numbers of microorganisms deeper in the soil.

Soil microbiologist Thomas B. Moorman and soil scientist Sidney S. Harper have another idea: that the deeper microorganisms may actually be different from their upstairs cousins.

"There are differences in numbers," says Moorman, who works with Harper at ARS' Southern Weed Science Laboratory at Stoneville, Mississippi. "But we suspect the microorganisms deeper in the soil are less efficient at breaking down herbicides."

Getting to know the deeper microorganisms is important because the information can be useful in assessing the likelihood of herbicide contamination of underground water supplies, says Harper.

"We want to find out what's going to happen to a herbicide once it gets to the groundwater," she says. "Will it be degraded by these microorganisms, or just stay there?"

Moorman and Harper are testing microorganisms in laboratory experiments using Dundee silt loam, typical of the Mississippi Delta, and Eustis loamy sand, typical of the Coastal Plains of Georgia and Florida.

REX PAUL

Pesticide-degrading bacteria on the surface of a grain of sand at Plains, Georgia. Magnified about 3,200 times. (88BW1165)

The scientists mixed Eustis soil from eight depths with the herbicide alachlor at about 1 part per million. They checked the mixtures seven times, at intervals ranging from 0 to 161 days, to see how much herbicide the microorganisms had eliminated.

"The half-life is the amount of time it takes for half of the herbicide to break down," explains Moorman. "At the surface, alachlor's half-life was about 23 days. At 50 feet, the half-life was about 380 days."

The chemical metribuzin degraded in Dundee loam about three times faster in the first 2 inches than in the next 2 inches down, Harper says.

Moorman and Harper will study 120 randomly selected microorganisms from Eustis soil for physical differences and ability to break down chemicals.

They will also study the impact of tillage practices and nutrients such as nitrogen on the microorganisms' efficiency.

Thomas B. Moorman and Sidney S. Harper are at the USDA-ARS Herbicide Interactions in Plants and Soils Unit, Southern Weed Science Laboratory, P.O. Box 350, Stoneville, MS 38776 (601) 686-2311. ◆

Computerized 'Crystal Ball' for Wheat Growth

Imagine that your personal computer could tell you when to expect the first leaf on the rose bush you planted last month - or better yet, when to water, add a little fertilizer to the soil, or expect to see some flowers.

Substitute "wheat" for "rose bush," and you've just imagined PLANTEMP.

PLANTEMP is the brainchild of Elizabeth L. Klepper, an Agricultural Research Service plant physiologist, and ARS soil scientist Ronald W. Rickman. They work at ARS' Columbia Plateau Conservation Research Center at Pendleton, Oregon.

PLANTEMP is a computer modeling program that enables its users to predict when the major parts of the plant - its roots, stems, and leaves - will appear, using just weather data.

"The program can be used anywhere winter wheat is grown," Klepper says.

To zero in on particular stages of plant growth and predict how quickly their wheat will grow, farmers type daily maximum and minimum air temperatures into PLANTEMP.

In addition, the program helps growers adjust planting and irrigation methods and schedules for more vigorous early plant growth.

Klepper's work with wheat plants means greater profits for agricultural producers and a better understanding for scientists of how this vital plant manufactures the nutrients needed by both people and livestock.

To develop PLANTEMP, Klepper and co-workers diagramed the order in which individual wheat leaves, shoots, and roots usually appear on the plant.

"With too much stress, such as drought or too little fertilizer, roots may be shorter than usual and leaves may be omitted or produced later than shown on our diagram," says Klepper.

By comparing this wheat-development sequence with the way their own crops are growing, grain producers can "read" the stress history of a plant and, if possible, improve the following year's crop.

A publication describing the PLAN-TEMP software is available from Oregon State University (OSU) Extension Service, Corvallis, Oregon. Request publication number EM 8308, "PLANTEMP Version 2.0."

FOR ADDITIONAL INFORMATION: Elizabeth Klepper, USDA-ARS Columbia-Plateau Conservation Research Center, P.O. Box 370, Pendleton, OR 97801; (503)276-3811.

Research Technology
Agricultural Research Service
U.S. Department of Agriculture

Testing for Natural Herbicides

Some plants contain allelopathic compounds, chemicals that serve to repel competing species. These natural herbicides explain why a pole bean may "refuse" to climb a sunflower stalk, or why young tomatoes may be killed off by a nearby walnut tree.

In the best of possible worlds, scientists would be able to take this biochemical trait and tailor it into crops, making them virtually self-weeding. For a long time, though, scientists had no luck harnessing these natural herbicides.

Because the compounds appear only in miniscule traces, the compounds proved impractical to study. No laboratory test was sensitive enough to register their presence; to turn up detectable amounts of the chemicals, it would take acres of experimental plants.

Enter a cadre of Agricultural Research Service scientists in Frederick, Maryland, who realized what was needed—not added acres of full-sized plants, but a more sensitive test using much smaller members of the plant kingdom.

Agricultural Research Service plant physiologist Gerald R. Leather proposed a miniature experimental stand-in for the usual experimental crops, an aspirin-sized aquatic plant called duckweed that lent itself to being grown 24 at a time in wallet-sized plastic plates.

"Each test plate is essentially an acre of field tests in the palm of my hand," Leather points out.

Along with Frank A. Einhellig from the University of South Dakota, he refined a duckweed bioassay or tissue test that allows scientists to detect the herbicidal action of allelopathic chemicals in minute amounts.

TIM McCABE

Aspirin-sized mature duckweed plants are used in a bioassay to locate traces of allelopathic chemicals. (K-2078-14)

Using the test, Leather can trace the impact of a natural herbicide on duckweed tissue in amounts as small as a few parts per billion. "The test is so sensitive, it's like being able to detect the addition of one grain of salt to a jug of water," he says.

Leather tests the fractions of extracts for herbicidal action on duckweed. Then the chemists further break down those fractions found to be effective. Dozens of individual compounds are tested on duckweed in this way. Each compound is dropped into a different "pond" containing a plant.

The team is learning that plants use their self-protecting chemicals in

varying combinations and degrees. Further complicating things, the tissues of some plants can contain levels of allelopathic chemicals that would cause injury to the same plants if sprayed onto their surfaces.

Years in the future, the work may lead agricultural researchers to more weed-competitive crop plants with added allelochemicals, via breeding or genetic engineering.

But in biochemistry, news of better experimental methods travels fast. Even in the short time that the duckweed assay has been in use, it's proved to be the most sensitive test of its type. Today it's in use in industrial and academic labs throughout the world, and Gerald Leather is kept busy filling requests from around the world for his duckweed strains.–

Gerald R. Leather is in USDA-ARS Weed Science Research, Bldg. 1301, Fort Detrick, Frederick, MD 21701 (301) 663-7132. ◆

Computers

0218 ARCNET Redundant Hub

0219 Data Acquisition and Reduction Processor

0220 Integrated Refractive Effects Prediction System (Licensing Opportunity)

0221 Hyperswitch Network for Hypercube Computer—Data-driven dynamic switching enables high speed data transfer. (Licensing Opportunity)

Software

0222 Variable-Metric Algorithm for Constrained Optimization—A function is minimized subject to equality and inequality constraints.

Testing & Instrumentation

0223 Method and Device for Measuring Resistivity (Licensing Opportunity)

Fermi National Accelerator Laboratory

ARCNET Redundant Hub

In addition to performing its intended functions, FIRUS-88 Fermilab's fire, utility, security, and power-consumption monitoring system has served as a spawning bed for other Fermilab technology.

A prime example is the ARCNET redundant hub, developed at Fermilab recently. ARCNET is a token-passing network similar to an IBM token ring, but generally less expensive. Characteristically, redundant cabling hubs are handled in ARCNET by using so-called "double controllers" and double port hubs. Automatic switching between failed lines is accomplished by switching between controllers. The Fermilab ARCNET redundant four-part hub provides for automatic switching from a primary to a backup line. The ARCNET redundant hub also continuously monitors line status. The hub is configured on a card that fits into a standard STD bus.

The redundant hub is compatible with other ARCNET system components. Information on this device is available.

FOR ADDITIONAL INFORMATION: Office of Research and Technology Applications, Fermi National Accelerator Laboratory, P.O. Box 500, MS 208, Batavia, IL 60510; (312)840-3333. Refer to FAA-558/TN.

NAVY
Domestic Technology Transfer Fact Sheet

Data Acquisition and Reduction Processor

The Data Acquisition and Reduction Processor (DARP) is a non-militarized system (Figure 1) of hardware components similar to a set of logic/performance analyzers developed by the Naval Surface Warfare Center (NSWC). This system was developed for laboratory use in the debugging and evaluation of software and hardware on the AN/UYK-43 large-scale militarized computer. The DARP attaches via a special performance monitor interface to the computer under test and passively captures and time-tags data items presented by the interface.

Although the DARP was designed for use with the Performance Monitor Interface of the AN/UYK-43, the DARP can be adapted to any interface that presents parallel data accompanied by a pulse signal to indicate when the data is valid and stable for sampling. The current implementation can accept samples at a maximum rate of 6.67 MHz.

The DARP data collection units (up to 8) are individually controlled by the DARP Control Computer (currently an IBM PS/2 Model 80-111) containing custom hardware and MS-DOS/80386 based software. Parallel data from multiple asynchronous data sources is passively captured and time-tagged and then stored or discarded using a versatile set of operator specified criteria. Special features include (1) almost indefinite time correlation periods for discontinuous data sampling rates, (2) near real-time data acquisition and analysis, (3) some interaction between data collection units during data collection, (4) 1 M words of storage for data samples with time-tags per data collection unit.

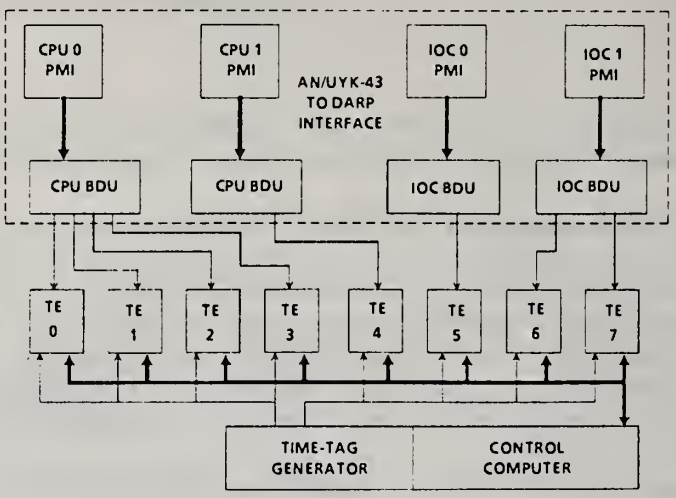

Figure 1. Example of System Configuration

Performance monitor interfaces used with the DARP have been developed for the AN-UYK-43, the AN/UYK-44, and the ROLM 1666B/C computers. Applications include:

- Program tracing
- Timing of software modules or single instructions
- CPU loading measurements
- Software performance comparisons (version to version)
- Monitoring I/O operations
- Instruction mixes
- Monitoring specific memory accesses

For Additional Information:

Backup material on this effort is available from:

Navy Domestic Technology Fact Sheet Reader Reply Service
Code E211
Naval Surface Weapons Center
Dahlgren, VA 22448-5000
(703) 663-8921

Refer to 140703/TN

U.S. Navy Fact Sheet

Integrated Refractive Effects Prediction System

The Integrated Refractive Effects Prediction System (IREPS) is a method and means of assessing the effects of the lower atmosphere on the performance capabilities of a variety of electromagnetic systems. Environmental data are entered into a computer and mathematical models are selected that generate displays to show various effects on the selected electromagnetic systems. These displays include, but are not limited to, plots of height-versus-range coverage of the system, height-versus-range ray traces, and plots of path loss versus range.

STAGE OF DEVELOPMENT

The method has been verified and has been implemented on several computer systems for use within the U.S. Navy. The method has also evolved into the Engineer's Refractive Effects Prediction System (EREPS) for use by scientists and engineers.

APPLICATIONS

This method has applications for anyone who wants to assess environmental effects on existing or proposed radar, communications, or other specialized electromagnetic systems operating in the 100 MHz to 20 GHz frequency range.

PATENT STATUS

United States Patent Number 4,125,893 issued Nov. 14, 1978.

PUBLICATIONS

1. NOSC TD 1151, "IREPS 3.0 User's Manual," W.L. Patterson, et. al., September 1987.

2. NOSC TD 1342, "Engineer's Refractive Effects Prediction System (EREPS); Revision 1.0 User's Manual," H.V. Hitney, et. al., July 1988.

MARKET DATA

Patent Title: Integrated Refractive Effects Prediction System

Number: 4,125,893

KEYWORDS:

Refraction, Propagation, Assessment, Radio, Radar

APPLICATIONS:

The most logical use of this patent is in marketing personal computer software for industry or university users. In particular

the software set known as the Engineer's Refractive Effects Prediction System appears to have a good market.

FOR ADDITIONAL INFORMATION: H. V. Hitney, Code 543, Naval Ocean Systems Center, San Diego, CA 92152-5000; (619)553-1428.

NASA Tech Brief
National Aeronautics and Space Administration

Licensing Opportunity

NASA's Jet Propulsion Laboratory, Pasadena, California

Hyperswitch Network for Hypercube Computer

Data-driven dynamic switching enables high speed data transfer.

The performance of a parallel algorithm depends mostly on the interconnection topology of the multicomputer system. A proposed hyperswitch network is based on mixed static and dynamic topologies. Here, available or fault-free paths need not be specified by a source because the routing header can be modified in response to congestion or faults encountered as a path is established. Static topology, such as the hypercube network, can meet this requirement if the nodes have switching elements that perform the necessary routing header revisions dynamically.

A multicomputer interconnection network may be judged by many different criteria, but network-link reliability and availability should be given the most emphasis. The proposed hypercube topology that is now being implemented with a switching element in each computer node, as shown in Figure 1, is aimed at designing a very-richly-interconnected multicomputer system. This interconnection network connects a great number of small computer nodes, using the fixed hypercube topology, which is characterized by point-to-point links between the nodes.

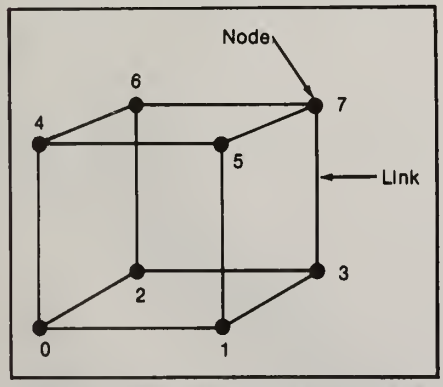

Figure 1. **Hypercube With Eight Computer Nodes** is shown in 3-dimensional hyperspace.

As can be seen in Figure 1, any two computer nodes that are not connected directly by a link need to have their messages relayed by the intervening nodes. In contrast with the fixed hypercube topology, the proposed network has no fixed dedicated links between the nodes but rather establishes these links through explicit switching elements and message-routing control logic located in each node, using the adaptive-routing algorithm. Therefore, the multicomputer system can route messages dynamically by this routing control logic, setting each switching element so that the links are shareable among a number of node pairs.

The adaptive-routing algorithm, which has been developed and implemented in hardware for the hyperswitch network, utilizes network pruning to avoid known busy or bad links and thus to establish the shortest path setup-time. Then the untried network territories are systematically explored to select one of the many possible paths.

Once a complete path has been traced and reserved, the path sections are latched to form a complete path for message transmission from the originating node to the destination node. The complete path may span many nodes, and, since it is latched by the routing control logic before any data are sent, transmitted data need not enter any intervening node for interaction with that computer or memory during the data transmission. Once the link is established data may be pipelined at rates up to the hardware limits of the communication path.

This type of network has the advantages of both static and dynamic networks. The static network characteristics enable the hyperswitch network to maintain locality, increase the number of I/O links, and provide multiple paths between two communicating nodes. The dynamic network characteristics provide high permutability, short message latency, and the capability to explore other computational/problem-mapping models.

Detailed simulation results have shown

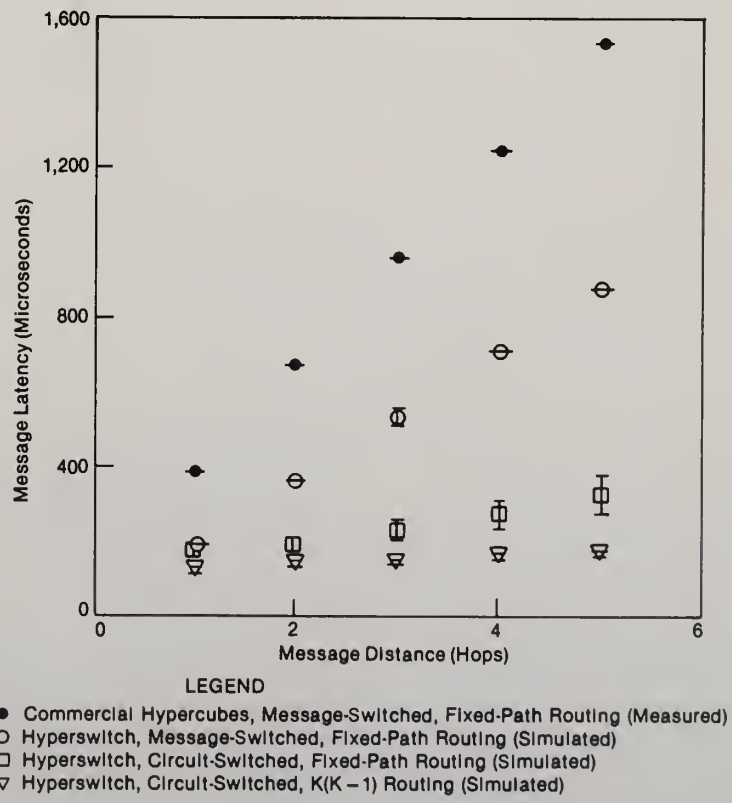

Figure 2. A **Comparison of Network Performance** shows the K(K – 1) routing scheme versus fixed-path routing schemes.

that the hyperswitch network is consistently more efficient than fixed-path routing for large-message-traffic conditions. The simulation results, shown in Figure 2, also show that the hyperswitch network extends the application of parallel systems to problems that place heavy demand on the communication network for high bandwidth, low latency, and non-local communication.

This work was done by Edward Chow, Herbert Madan, and John Peterson of Caltech for **NASA's Jet Propulsion Laboratory.**

In accordance with Public Law 96-517, the contractor has elected to retain title to this invention. Inquiries concerning rights for its commercial use should be addressed to

Edward Ansell
Director of Patents and Licensing
Mail Stop 301-6
California Institute of Technology
1201 East California Boulevard
Pasadena, CA 91125

Refer to NPO-16905/TN.

Jet Propulsion Lab.
NASA Resident Office
Technology Utilization Officer: Gordon S. Chapman
Mail Stop 180-801
4800 Oak Grove Drive
Pasadena, CA 91109
(818) 354-4849
Patent Counsel: Paul F. McCaul
Mail Code 180-801
4800 Oak Grove Drive
Pasadena, CA 91109
(818) 354-2734
Technology Utilization Mgr. for JPL: Norman L. Chalfin
Mail Stop 156-211
4800 Oak Grove Drive
Pasadena, CA 91109
(818) 354-2240

FOR ADDITIONAL INFORMATION: *Contact: Director, Technology Transfer Division, P.O. Box 8757, BWI Airport, MD 21240; (301) 621-0100 Ext. 241*

REFER TO THE NUMBER LISTED AT THE END OF THIS ARTICLE

Variable-Metric Algorithm for Constrained Optimization

A function is minimized subject to equality and inequality constraints.

The Variable Metric Algorithm for Constrained Optimization (VMACO) is a nonlinear computer program developed to calculate the least value of a function of *n* variables subject to general constraints (both equality and inequality). Generally, the first set of constraints is an equality (the target) and the remaining constraints are inequalities (boundaries). The VMACO program utilizes an iterative method in seeking the optimal solution. It can be "hooked" into a driver program (examples are provided), which can calculate the values for the real function, constraints, and their first-order partial derivatives with respect to the control variables.

It is assumed that the objective function is convex and unimodal. The user should be familiar enough with his or her simulation so that local maximums and minimums can be recognized.

The algorithm is based upon a variable-metric method presented by M. J. D. Powell and a quadratic programming method by R. Fletcher. This implementation requires more overhead in calculating each new control variable, but fewer iterations are required for convergence. In comparison with other algorithms, it has been found that VMACO handles test cases with constraints particularly well and that less execution time is necessary for convergence.

VMACO is written completely in ANSI Standard FORTRAN 77. The code is internally documented and modularly structured with rigid coding standards. The program requires approximately 26K of 8-bit bytes of central memory and was first released in 1988.

This program was written by James D. Frick of McDonnell Douglas Corp. for **Johnson Space Center**.
MSC-21275/TN

FOR ADDITIONAL INFORMATION

CONTACT:
COSMIC®
112 Barrow Hall
University of Georgia
Athens, GA 30602
(404) 542-3265

Method and Device for Measuring Resistivity

This technology solves the problem of measuring the electrical resistivity of components which may fall in one or both of two categories; a) either a protective coating or the composition of the material prohibits the formation of a good electrical contact, and 2) the resistivity falls in a range for which no calibration standards are available. The method is based on the universal impedance curve associated with all ferrite pot core eddy current probes. It relates the tangent of the lift-off angle to a reference number of which resistivity is a part. The tangent of the lift-off angle is the ratio of the change, due to the test material, of the imaginary component of the impedance to the change in the real component. The reference number is the ratio of the mean radius of the eddy current probe to the skin depth. Available commercial eddy current instruments do not provide accurate phase detection capabilities over the wide frequency range required to inspect carbon fiber reinforced compsites. The device provides for accurate phase detection over the necessary wide range of frequencies.

The main advantages is that it does not require calibration standards. With proper probe and frequency selection, the method covers an unlimited range of resistivities.

The method can be applied with modified laboratory instruments. The technology is ready for design of commercial instrument.

Literature: Vernon, S. N., "A Single-sided eddy current method to measure electrical resistivity," Materials Evaluation, Vol 22, Number 12, Nov 1988, pp 1581-1587; and Vernon, S.N., "The Universal Impedance diagram of the ferrite pot core eddy current transducer," IEEE Transactions on Magnetics, Vol 25, No. 3, May 1989, pp 2639-2645.

FOR ADDITIONAL INFORMATION: For information on licensing of this subject, contact the Naval Surface Warfare Center, Mr. Ramsey D. Johnson, Code D211, Naval Surface Warfare Center, Silver Spring, MD 20903-5000; (202)394-4332.

Electrotechnology

0224 Fiber Optics

0225 Leadless Chip Carrier

0226 Very High Speed Integrated Circuit (VHSIC)

0227 Polarized Rotary Solenoid

0228 Adaptive Telemetry Multiplexer—Data-acquisition characteristics can be changed as conditions change. (Licensing Opportunity)

0229 Digital Signal Processor for GPS Receivers—Features include reliability and compactness. (Licensing Opportunity)

0230 Radiation Damage in Advanced Bipolar Transistors—The degradation of current gain is measured.

0231 Simple Multiplexing Hand-Held Control Unit—The circuit contains only switches and resistors and requires only two connecting wires.

0232 Single Electrode Would Control Charge-Coupled Device—Space would be saved and interelectrode short circuits eliminated.

0233 SQUID With Integral Flux Concentrator—A slotted superconducting disk concentrates magnetic flux from an external coil. (Licensing Opportunity)

0234 VLSI Universal Noiseless Coder—Features would include reliability, low weight and power, and small volume.

Other Items of Interest

0263 Neutral Format for HMA Manufacturers

0276 Thermoplastic Enclosures for Avionics

Technology Fact Sheet
U.S. Air Force

Fiber Optics

SYNOPSIS:

Fiber optic systems convert electronic communications signals into pulses of light that shoot down bundled optic fibers (see picture at right). The light is then converted back to an electronic signal at the receiver. The fibers are made of glass, plastic, or other transparent material. (continued on reverse side)

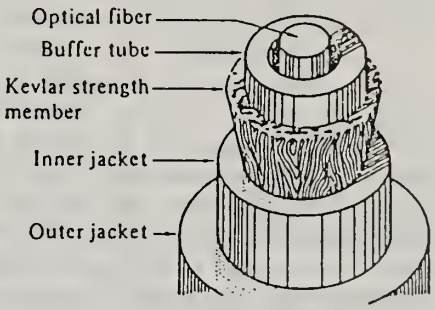

BENEFITS/DRAWBACKS:

The information carrying capacity of optical fiber systems is far superior in several ways to the best copper cable systems. The TPS-43E mobile ground radar copper cable was replaced with fiber optics. The low signal loss of fiber optics compared with copper allowed the distance between the control center and the radar emitter to be increased from 380 feet to 6580 feet. Mobility requirements were decreased, three spools of 4-strand fiber optic cable replaced three trucks of copper coax cable (compare the three trucks to the three larger spools in the picture on the reverse side). The TPS-43E control center is now more survivable because it is farther from the radar emitter, which draws enemy fire. Signals in fiber optic cable don't radiate beyond the optic bundle nor are they susceptible to interference, these properties solve electromagnetic interference (EMI) problems. (continued on reverse side)

AIR FORCE RELIABILITY AND MAINTAINABILITY 2000 GOALS:

Increase combat capability.
Increase survivability of the combat support structure.
Decrease mobility requirements per unit.
Decrease manpower requirements per unit of output.
Decrease costs.

APPLICATIONS:

Fielded - TPS-43E RADAR and the TSQ 61 or 91 Van in tactical radar remoting.
- Communications lines (Patrick AFB and Ramstein AB)
- Ground Launch Cruise Missle (GLCM) communication lines (since 1983)
- AV-8B, a 33 foot long cable connecting the digital map set to the cockpit panel

Current - ALE-XX prototype for ALE-40 Flare Chaff Dispenser System

Future - Fiber Optic Guided Missile (FOG-M)

DOCUMENTATION:

ALE-XX Report (SM-ALC Fiber Optics TAPM, see POC); MIL-STD-1773, Fiber Optic Bus; MIL-STD-188-111 (Draft); MIL-HDBK-415; DOD-STD-1678; and FED-STD-1070.

SYNOPSIS (continued):

An optical carrier may be modulated using either an analog or digital information signal. Fiber optic cables do not pose electrical shock or fire hazards since photons rather than electrons are used. Other properties include less than 0.80 dB crosstalk between fibers, complete electrical isolation between terminals, electromagnetic interference immunity, and nuclear electromagnetic pulse resistance. Optical fibers are often no larger than the diameter of a human hair. Hence, even when fibers are covered with protective coatings they are far smaller and much lighter than corresponding copper cable. Fiber optics have low power requirements and allow a transmission distance of tens of kilometers between repeaters at over 100 MHz bandwidth.

BENEFITS/DRAWBACKS (continued):

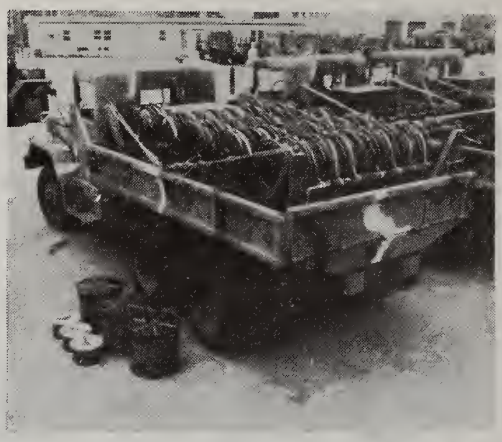

An example is the ALE-XX prototype Flare Chaff Dispenser System for the A-10. Chaff was ejecting accidentally because of other systems electromagnetic emissions and the current system's poor resistance to interference. Mostly through the use of fiber optics the interference problems were eliminated and other benefits were realized. They included reducing the numerous small boxes (40) thoughout the aircraft to 28 by the elimination of filters. This increased the MTBF from 100 to an estimated 1500 hours. Fiber is generally superior in terms of storage, transportation, handling and installation than corresponding copper cables while exhibiting at least comparable strength and durability. The use of high-strength optical fibers in the development of the fiber optic guided missile (FOG-M) by the Army is but one example. One prototype of the FOG-M is a nonline-of-sight missile that can be fired from a hidden position while enabling the gunner to make continuous aimpoint changes through a trailing fiber optic cable during the missile's flight. The wide bandwidth of the fiber optic data link enables sophisticated image and guidance signal-processing electronics to be removed from the missile and placed at the reusable launcher. The missile has been successfully tested with several miles of spooled fiber carried on board the missile; a demonstration that fiber cable is not only small and light but also tough. An example of first year cost reductions is the installation of fiber optic communication lines at $8/foot compared to an equivalent 24 line copper trunk cable at $27/foot at Patrick AFB. Fiber optics is new to the Air Force support structure, especially in aircraft applications. While maintenance and repair is not complicated, training is required. Breaks in the cable can be accurately pinpointed. There are two repair technics, fusion and the use of small capillary tubes. Light meters are used to check alignment just as continuity would be checked with copper cable. One concern with restoring is the replacement of the protective sheath. Enclosures have not been perfected for 4-strand cable and larger. One of the concerns is repairing the strain relief provided by the kevlar in the sheathing. Fiber optics can carry only information signals, but power-carrying copper cables can be bundled with fiber optics making a single cable. The biggest drawback with the current use of fiber is the lack of standardization (Note the many listed documents in the Documentation section). Questions range from concerns on the number of strands to use (either one, two, four, or six strand fiber) to the type of connectors. Connectors also do not perfectly align the fibers which reduces signal strength. This limits the number of connectors that can be placed between light sources.

TECHNOLOGY CONTACTS:

Office: EID/EP (FO) (AFCC)(Capt Borkowski)
Communication Lines
AUTOVON: 884-9770
Comm: (405) 734-9266

Office: SM-ALC/MMEHD (Mr Ellis Anderson)
AFLC TAPM for Fiber Optics
AUTOVON: 633-3293
Comm: (916) 643-3293

TECHNOLOGY CONTACT:

AFWAL/AAAS (Mr Phil Goldman)
Avionics
785-3765
(513) 255-3768

USER CONTACT:

2179th CG/LGLC (Mr Wayne Smith)
Maintainer of fiber lines at Patrick AFB
467-5041
(305) 853-5041

This TechTIP report was produced as part of the Technology Transfusion Program at the Air Force Coordinating Office for Logistics Research (AFCOLR/TT). For further information on the subject technology please contact the listed organizations. Comments or questions about the Technology Transfusion Program are welcomed and should be addressed to "TechTIP", AFCOLR/TT, Wright-Patterson AFB, OH 45433-5000 or call AUTOVON 785-1607, COMMERCIAL (513) 255-1607.

Technology Fact Sheet
U.S. Air Force

Leadless Chip Carrier

SYNOPSIS:

Leadless Chip Carriers (LCC) are a surface mount technology made of ceramic substrate carriers into which integrated circuit chips are mounted. Leadless chip carriers mean that there are no chip pins, or leads, directly inserted into the PCBs. The LCCs are internally wire bonded such that, when mounted to printed circuit boards (PCBs), a continuous circuit results. The drawing on the right shows the difference between leadless and leaded construction. In general, they allow for reduced local damage when removing failed chips from the PCB. They provide reduced volume and weight as compared to conventional components with pin leads. The leadless chip carriers come in a family of carriers which accept 16 to 84 pin count chips. The surface mounting devices allow for increased (continued on reverse side)

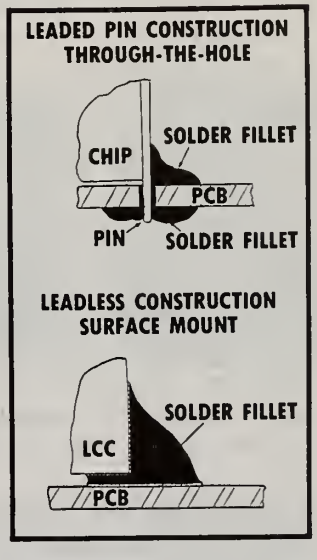

APPLICATIONS:

Fielded: F-15C/D APG-63 Radar (PRAM Project No: 13683-01)
Current: F-15E APG-70 Radar, LANTIRN Navigation and Targeting Pods

AIR FORCE R&M 2000 GOAL HIGHLIGHTS:

Increase Combat Capability: Reduced thermal stresses increase service life
Decrease Manpower Requirements: Increased maintenance efficiency in debugging integrated chips/PCBs
Decrease Costs: Manufacturing processes with greater process control

BENEFITS/DRAWBACKS:

The benefits of the leadless chip carrier begin with improved use of space on PCBs. LCCs provide for manufacturing methods and improved production control by avoiding the need for hole drilling, and the uncertainties of through the hole soldering. The ceramic substrates reduce the thermal stresses. Power dissipation temperatures can be reduced by up to 10 degrees C. A major advantage over through-the-hole components is the ease of rework. A common soldering iron, or better yet, an automated one with an adaptor to encompass the entire LCC can be used. These are commercially available and relatively inexpensive. Integrated chips in LCCs can be mounted on both sides of PCBs because there are no pin leads going through the boards. A fielded application is the 042 Bulk Memory Module on the F-15 APG-63 radar. Previously, each module had 20 layer PCBs populated with direct mount, multi-pin large scale (continued on reverse side)

DOCUMENTATION:

a. Final Report, Leadless Chip Carrier for APG-63 Radar, dated April 88, Martin-Marietta Corp, Orlando, FL, Contract F33657-84-C-0242
b. PRAM Project Final Report, Leadless Chip Carrier (LCC) Module, dated 1 July 88, PRAM Project No. 13683-01.
c. Reliability Assessment of Surface Mount Technology, dated March 88, RADC-TR-88-72
d. Leadless Components on Ceramic Circuit Boards, dated September 87, NAVSO-P-3651

SYNOPSIS (cont'd):

component density on a printed circuit board (PCB) as compared to conventional through the hole devices. The ceramic substrate yields a 2 to 1 improvement in thermal conductivity and contributes to more efficient module cooling.

BENEFITS/DRAWBACKS (cont'd):

integrated circuits. This arrangement was conducive to damage when replacing chips during troubleshooting and repair procedures. Further complicating the situation was the obsolescence of many of the large scale integrated circuits. By switching to leadless chip carriers with very large scale integrated circuits (see TechTIP 88006) and newer PCB materials, the designers were able to replace four old boards with one new board. These changes also increased the memory from 96K to 384K in a single precise form, fit, and function PCB. The other three board slots use jumper boards..The costs went from $74K for four boards down to $15K for one board. Other benefits included a weight saving of 4.47 pounds which is five and a half times lighter than the four board system. The estimated useful system life savings on the APG-63 radar is $65M. There are no hardware changes required for the test equipment. And lastly, the modules are being procured as preferred spares.

There are a few drawbacks and concerns with the leadless chip carriers. Studies have revealed that the footprint on the surface of the PCB corresponding to the circuitry on the base of the leadless chip carrier is of crucial importance to the reliability of the solder joint in a thermal environment which cycles repeatedly. Because the bonding configuration is such that the joints are not directly accessible for a direct view, visual inspection of the joints becomes difficult if not impossible. Hence, the survivability of each joint under the rigors of field use can not be visually verified. Some technology experts are concerned about the reliability of LCC in extreme aircraft environments (thermal and g-loading). AFCOLR recommends using Electronic Stress Screening (see TechTIP 88009) for early identification of these defective components. Rome Air Development Center is investigating the use of laser heat injection with infrared temperature monitoring to inspect joint survivability. The AFWAL Materials Lab is sponsoring a Manufacturing Technology program which addresses the design and automation of surface mount technology for VHSIC components.

A major design concern is matching the coefficient of thermal expansion of the substrate, the leadless chip carrier, and the PCB outer layers to reduce the solder joint fatigue during thermal cycling. The better the match, the longer the potential service life. Another concern is in the reworking of PCBs with leadless chip carriers. Improper actions during rework of surface mount technologies can cause problems similar to those experienced on conventional PCBs such as burning the PCB and lifting pads, and damaging components. Temperature problems on some systems have resulted in the need for wider spacing between components. Without careful design, high temperature may reduce some of the space saving advantages of LCC. Trained operators are required for repair of all PCBs. With increased operator experience, reworkability becomes an advantage.

In your application of leadless chip carriers, conducting a short term OT&E on a prototype module can prove that the new technology is more reliable than the existing module. A longer term OT&E and more prototype modules will be required to develop true reliability and maintainability projections for fleet-wide applications. There are other surface mount technologies ("gull wing" and "J" leader chip carriers) which may meet your requirements. There are other substrate materials (kevlar and copper/invar/copper) which may be used in lieu of ceramics.

TECHNOLOGY CONTACTS:

Office: ASD/AEM, WPAFB OH 45433
(Mr Han Chung)
AUTOVON: 785-6816
Comm: (513)255-6815

Office: RADC/RBER, Griffiss AFB NY
(Mrs Gretchen Bivens)
AUTOVON: 587-4891
Comm: (315)330-4891

USER CONTACT:

Office: WR-ALC/MMIRFS, Robins AFB GA
(Mr Joe Cothron)
AUTOVON: 468-5673
Comm: (912)926-5673

This TechTIP report was produced as part of the Technology Transfusion Opportunities Program at the Air Force Coordinating Office for Logistics Research (AFCOLR/TT). Determining the feasibility of using this technology in a particular application requires a thorough evaluation of system requirements and the capabilities provided by the technology. For further information on the subject technology, please contact the listed organizations. Comments or questions about the Technology Transfusion Opportunities Program are welcomed and should be addressed to AFCOLR/TT Wright-Patterson AF8, OH 45433-5000 or call AUTOVON 785-1606, Commercial (513) 255-1606.

Technology Fact Sheet
U.S. Air Force

Very High Speed Integrated Circuit (VHSIC)

SYNOPSIS:

VHSIC is a family of advanced integrated circuit chips with increased speed and density. VHSIC improvements over previous technology includes a five fold increase in clock rates (25MHz compared with 5MHz), almost half the feature size (1.25 Micron compared with 2 Micron), more than double the gates (more than 20,000 compared to 10,000) and built in test (BIT) on the chip. These characteristics allow for higher functional throughput, future growth capability with lower system power requirements. VHSIC was driven by military specific clock speed requirements. It is related to Very Large Scale Integrated (VLSI) circuits. VLSI is driven by miniaturization goals which has the spin off of increased speeds.

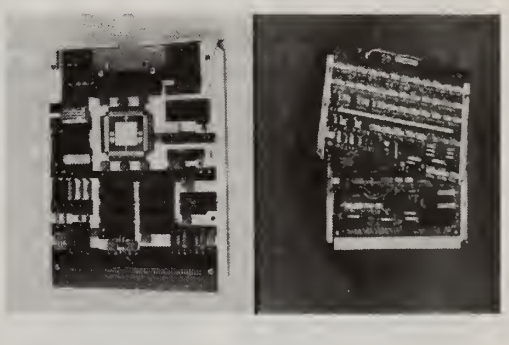

BENEFITS/DRAWBACKS:

VHSIC has been applied on the Digital Signal Transfer Unit (DSTU) in the F-111. The application was accomplished by the SM-ALC VHSIC Technology Center. The VHSIC chip (see picture of before and after printed circuit board (PCB)) reduced the integrated circuit components from 224 to 66, with an improvement in the reliability from 40 hours MTBF to an estimated over 5000 hours. (continued on reverse side)

AIR FORCE RELIABILITY AND MAINTAINABILITY 2000 GOALS:

Increase combat capability.
Increase survivability of the combat support structure.
Decrease mobility requirements per unit.
Decrease manpower requirements per unit of output.
Decrease costs.

APPLICATIONS:

Current - Digital Signal Transfer Unit (F-111)
- ALQ 131
- 1750A Computers
- TTL Gate Array (54XX) Chip Replacement

Future - Stores Management System (F-111)
- Radar Warning Receiver (F-15)

DOCUMENTATION:

RADC-TR-87-13 Maintenance Concepts for VHSIC, Call the POCs

BENEFITS/DRAWBACKS (continued):

The board successfully finished flight tests at Cannon AFB in Dec 1987 without enough failures to calculate a MTBF. The VHSIC capabilities allow for Build in Test (BIT) to be designed into the boards with 98% fault isolation (note second connector for BIT on the VHSIC board). The old DTSU cost $24K compared to $3K for the production VHSIC DTSU. Total cost savings are estimated at $3.5 million. SM-ALC is also working a VHSIC transistor transistor logic (TTL) gate array which will address IC technology obsolescence, namely the 54XX series IC. The new TTL gate array chip is designed to replace 99% of this series of IC. This is accomplished through the personalization of a silicon wafer to represent the desired 54XX chip. The wafer is overruled with a metallic mask that allows the silicon wafer to emulate the desired 54XX chip. Prototypes were delivered to SM-ALC in Nov 1987.

Computer Aided Design (CAD) and Computer Aided Engineering (CAE) tools have been developed at SM-ALC Microelectronic Technology Center (SM-ALC/MME) as well as other centers to reduce design costs. A VHSIC Hardware Description Language (VHDL) is being developed to help characterize circuits in a standardized language. VHDL will be used for circuit simulations, fabrication of form-fit-function replacement circuits, as well as a tool to combine circuits into a single VHSIC chip. System costs are decreased with decreased number of parts, smaller size, and lower power requirements. Reliability is increased by the consolidation of many separate device circuits on a single chip. VHSIC technology is essential to the continuing effort to cram more electronic functions into less space and less weight, at lower power use, with higher reliability.

Drawbacks include a high initial cost and limited production sources. These drawbacks are typical with technology that is new and just now being inserted into the first systems. Other concerns about the use of VHSIC include the testability. Efforts are underway to develop software that provides for exercising the BIT during off peak periods, and for maintaining the fault data for later retrieval to be used as repair information and help with fault isolation. Additional efforts are underway to develop software to perform testing on the subsystem during operations. Chip repair is currently not possible, but research is underway.

Both VHSIC and VLSI have their benefits and drawbacks and each needs to be considered based on your specific requirements.

TECHNOLOGY CONTACTS:

Office: SM-ALC/MMEHR (Mr Dean Albrecht)
F-111 DSTU
AUTOVON: 633-6454
Comm: (916) 643-6454

Office : AFWAL/AAD (Mr Werner)
AUTOVON: 785-6723
Comm: (513) 255-6723

USER CONTACT:

SM-ALC/MMI (Mr Dale Duffin)
F-111 DSTU
633-1215
(916) 643-1215

This TechTIP report was produced as part of the Technology Transfusion Program at the Air Force Coordinating Office for Logistics Research (AFCOLR/TT). For further information on the subject technology please contact the listed organizations. Comments or questions about the Technology Transfusion Program are welcomed and should be addressed to "TechTIP", AFCOLR/TT, Wright-Patterson AFB, OH 45433-5000 or call AUTOVON 785-1607, COMMERCIAL (513) 255-1607.

NAVY
Domestic Technology Transfer Fact Sheet

Polarized Rotary Solenoid

In rotary solenoids, the electrical energization of a winding produces an oscillating movement of a shaft. Direct current is used to energize the circuit that produces a predetermined number of alternate positive and negative pulses This arrangement is effective, since it is unlikely that any single energizing circuit failure will produce this number of such pulses.

Polarized relays are those in which different switching functions occur when opposite-polarity direct current is applied to a winding. Direct-current polarized actuation is used where great reliability is required. However, thus far, polarized devices for certain purposes are not suited for use as rotary solenoids, particularly where a relatively high-torque, compact, efficient, and rugged actuator is required.

The polarized rotary solenoid described here has a pivotally mounted permanent magnet armature arranged between a pair of oppositely polarized electromagnetic poles. Opposite direct current applied to the winding for the poles urges the armature in opposite directions. Thus, the permanent magnetism of the armature maintains the armature in the extreme positions of its movement without springs, mechanical detents, or continuous application of electric power.

The present invention is fully effective, light in weight, and economical in construction; it is well suited to a compact and rugged solenoid for use in solenoid-operated devices where great reliability is required.

For Additional Information:

Backup material on this effort is available from:

Navy Domestic Technology Fact Sheet Reader Reply Service
Code E211
Naval Surface Weapons Center
Dahlgren, VA 22448-5000
(703) 663-8921

Refer to 140702/TN

NASA Tech Brief
National Aeronautics and Space Administration
Lyndon B. Johnson Space Center, Houston, Texas

Licensing Opportunity

Adaptive Telemetry Multiplexer

Data-acquisition characteristics can be changed as conditions change.

A telemetry-data-acquisition unit can be adjusted remotely to produce changes in the sampling rate, sampling channels, measurement scale, and output-bias level. Its functional configuration can be adapted to changing conditions or new requirements by a distant operator over the telemetry link. The reconfiguration is done in real time, without removing the equipment from service.

The prototype unit (see figure) includes an intelligent bus-interface unit (BIU) and a low-rate adaptive multiplexer (LRAM). It accommodates up to 31 remote terminals, each with 56 analog sensors, 10 gain ranges, 32 bias levels, sensor-sampling rates ranging from less than 1 to 200 samples per second, and optional automatic gain rescaling. The telemetry unit acquires signals directly from the sensors and performs signal conditioning, multiplexed channel sampling, amplification, output-bias-level adjustment, and analog-to-digital conversion. It stores digitized raw data from each channel in a dual-port, random-access memory.

The remotely adjustable parameters are stored in an electronically programmable read-only memory (EPROM). The operator reprograms the EPROM chip through the BIU for new channel selections, sampling rates, measurement scales, and output bias levels as they are needed.

The automatic-gain-rescaling feature changes the gain of a channel to the next higher (or lower) setting if the lower (or upper) data limits are exceeded on two consecutive samples. The data limits can be reprogrammed remotely.

The BIU recognizes the following nine commands from the remote operator:

1. Send data from all channels.
2. Send discrete word.
3. Send built-in-test-equipment word.
4. Send adaptive-status word.
5. Echo reprogrammed parameters.
6. Reprogram channel parameters as specified by the data words sent.
7. Start data acquisition.
8. Stop data acquisition.
9. Change to new sampling rate.

Commands 1 through 5 are transparent to the LRAM. Commands 6 through 9 must be translated by the BIU processor into commands recognized by the software of the LRAM.

In tests, the adaptive multiplexer performed well: amplitude errors were less than 0.5 percent, distortion was less than 0.25 percent, and crosstalk and common-mode rejection were indiscernible.

This work was done by R.L. Sinderson and G.A. Salazar of **Johnson Space Center**, *and C.M.. Haddick, Jr., C.J. Spahn, and C.N. Venkatesh of Lockheed Corp.*

This invention is owned by NASA, and a patent application has been filed. Inquiries concerning nonexclusive or exclusive license for its commercial development should be addressed to the Patent Counsel, Johnson Space Center. Refer to MSC-21170/TN.

Lyndon B. Johnson Space Center
Technology Utilization Officer: Dean C. Glenn
Mail Code IC-4
Houston, TX 77058
(713) 483-3809
Patent Counsel: Edward K. Fein
Mail Code AL3
Houston, TX 77058
(713) 483-4871

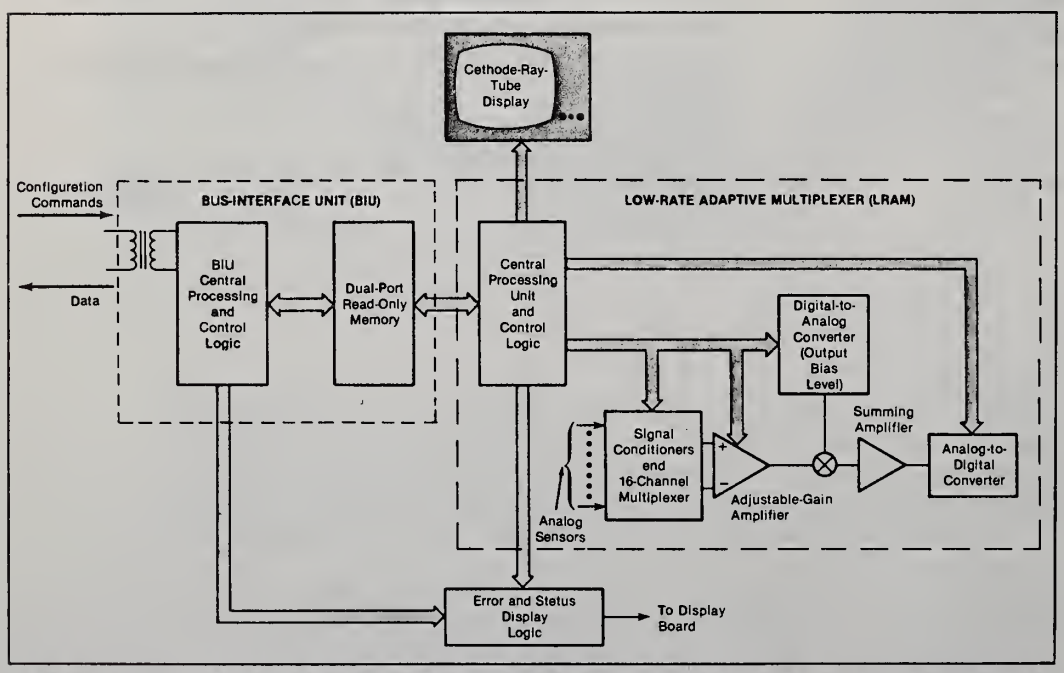

The **Bus-Interface Unit Accepts Reprogramming Commands** and translates them for the low-rate adaptive multiplexer. The reprogrammable equipment reduces the need for spare parts, since it is not necessary to stock a variety of hardware with fixed characteristics.

FOR ADDITIONAL INFORMATION: *Contact: Director, Technology Transfer Division, P.O. Box 8757, BWI Airport, MD 21240; (301) 621-0100 Ext. 241*
REFER TO THE NUMBER LISTED AT THE END OF THIS ARTICLE

NASA Tech Brief
National Aeronautics and Space Administration
NASA's Jet Propulsion Laboratory, Pasadena, California

Licensing Opportunity

Digital Signal Processor for GPS Receivers

Features include reliability and compactness.

Three innovative components have been combined to produce an all-digital signal processor with superior characteristics: outstanding accuracy, high-dynamics tracking, versatile integration times, lower loss-of-lock signal strengths, and infrequent cycle slips. The three components are a digital chip advancer, a digital carrier downconverter and code correlator, and a digital tracking processor. The all-digital signal processor is intended for use in receivers of the Global Positioning System (GPS) for geodesy, geodynamics, high-dynamics tracking, and ionospheric calibration.

The figure is a block diagram of the prototype GPS receiver. Using fixed-frequency local oscillators, the front end downconverts the GPS signals from radio frequency to baseband, where the signals are low-pass filtered and digitally sampled. Three digitally sampled signals are supplied: the P_1 and P_2 signals (e.g., each at 15.374 megasamples per second) and the C/A signal (e.g., at 1.5374 megasamples per second).

The sampling frequency should be essentially incommensurate with the fundamental chip rate (e.g., 15.374 MHz vs. 10.23 MHz) so that discrete sampling errors will be negligible. For stationary receivers on the Earth, the frequency offset of the local oscillators should be of the order of 10 kHz so that carrier downconversion in the baseband processor can work with high accuracy.

In an example of the operation of the system, the signals of all visible GPS satellites are simultaneously received by an omnidirectional antenna and are therefore all embedded in the baseband signal. In the digital baseband processor, a separate digital signal processor is provided to extract the signals from each satellite. A host microprocessor coordinates the digital signal processors and collects the output data. Even though this example shows each digital signal processor reducing the signal from only one satellite, more than one satellite could be processed by a digital signal processor by programming its microproc-

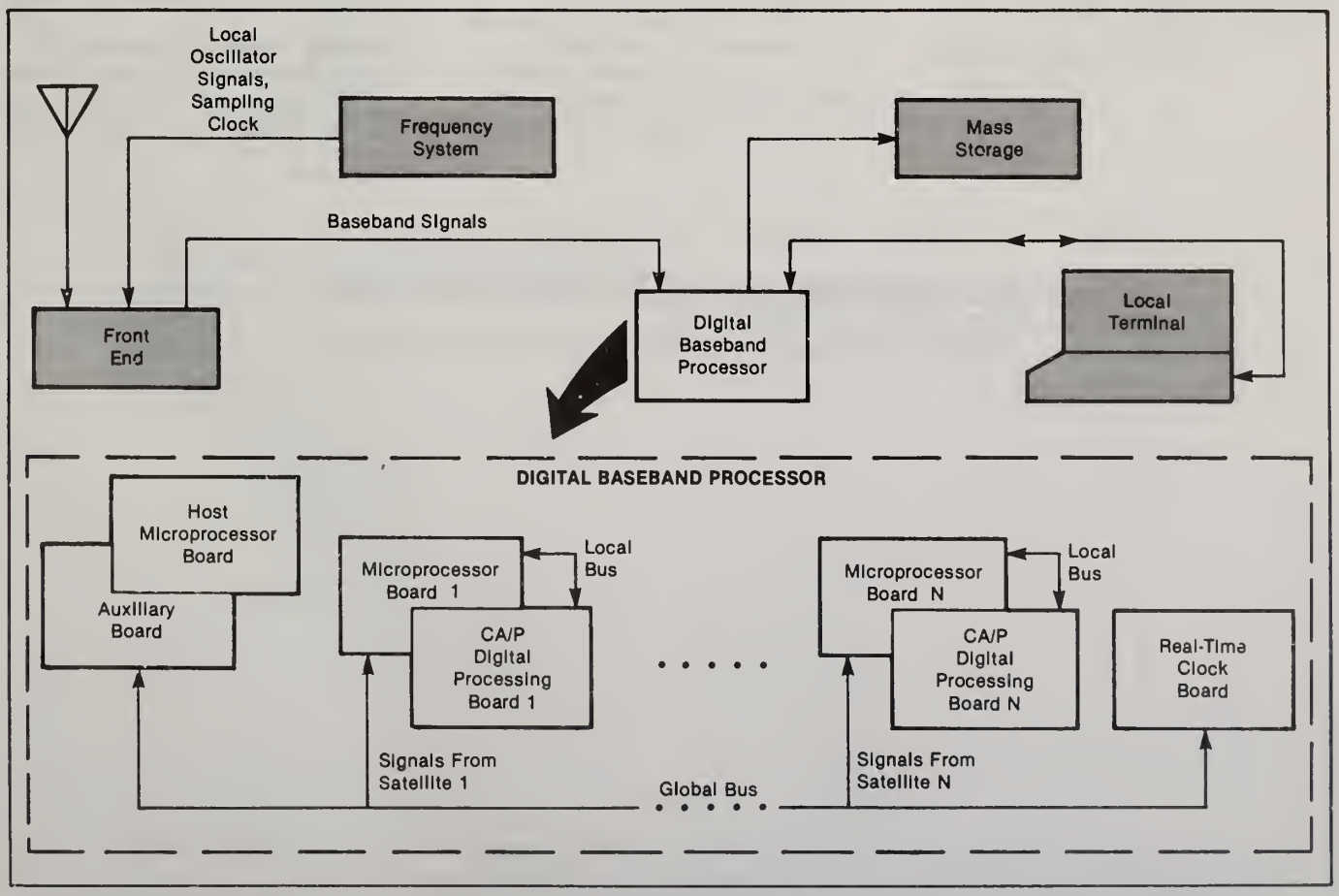

The **Prototype GPS Receiver** includes the digital signal processor, which operates on the baseband signal to extract the GPS data.

essor to time-multiplex its digital equipment between satellites.

In addition to the reliability and compactness that are usually characteristic of digital design, the design of the baseband processor offers the following advantages:

- The total delay and phase errors caused by the baseband processor are very small (less than 0.1 millichip and 1 millicycle, respectively).
- High-phase dynamics up to 1,000 Hz/s can be tracked with high accuracy.
- Signal strengths at which lock is lost are up to 4 to 6 dB lower than in other receivers.
- The rate of occurrence for cycle slips is extremely low for all channels.
- The design requires no special circuitry to count cycles or to maintain in-lock data-bit synchronization.
- Selectability of the fast-feedback interval (10 or 20 ms) provides valuable flexibility in making compromises between dynamics and the signal-to-noise ratio.
- Selectability of the output-point interval (1, 2, 3, ... 300 s) satisfies the requirements of a wide range of users. (If necessary, intervals between 20 and 1,000 ms could also be included in the design.) Subsequent data reduction is simplified for the user by forcing output timetags to fall on integer seconds that are synchronized with GPS time.
- Sample-rate and carrier-frequency offsets can be set within a wide range of values.
- The starting time and the integration interval can be set by the microprocessor, providing great flexibility in operation, including multiplexing between satellites.

This work was done by J.B. Thomas, T.K. Meehan, and J.M. Srinivasan of Caltech for **NASA's Jet Propulsion Laboratory**.

In accordance with Public Law 96-517, the contractor has elected to retain title to this invention. Inquiries concerning rights for its commercial use should be addressed to

Edward Ansell
Director of Patents and Licensing
Mail Stop 301-6
California Institute of Technology
1201 East California Boulevard
Pasadena, CA 91125

Refer to NPO-16997/TN.

Jet Propulsion Lab.
NASA Resident Office
Technology Utilization Officer: Gordon S. Chapman
Mail Stop 180-801
4800 Oak Grove Drive
Pasadena, CA 91109
(818) 354-4849
Patent Counsel: Paul F. McCaul
Mail Code 180-801
4800 Oak Grove Drive
Pasadena, CA 91109
(818) 354-2734
Technology Utilization Mgr. for JPL: Norman L. Chalfin
Mail Stop 156-211
4800 Oak Grove Drive
Pasadena, CA 91109
(818) 354-2240

FOR ADDITIONAL INFORMATION: *Contact: Director, Technology Transfer Division, P.O. Box 8757, BWI Airport, MD 21240; (301) 621-0100 Ext. 241*
REFER TO THE NUMBER LISTED AT THE END OF THIS ARTICLE

NASA Tech Brief
National Aeronautics and
Space Administration

Radiation Damage in Advanced Bipolar Transistors

The degradation of current gain is measured.

A report describes measurements of the common-emitter current gains (h_{FE}) of advanced bipolar silicon transistors before, during, and after irradiation with 275-MeV bromine ions, 2.5-MeV electrons, and γ rays from cobalt-60 atoms. The decrease in h_{FE} is used as a measure of the radiation-induced damage. The nonionizing component involves the displacement of atoms from their sites in crystalline lattices. Displacement damage in the base region of a transistor can reduce the h_{FE}. Such damage in the oxide or on the surface (where it could increase surface recombination) may also play a role in the reduction of h_{FE}.

The specimens were commercial transistors made according to minimum-geometry design rules. The devices had n^{++} emitters, 2 μm^2 in area, inside p-type buffer bases. The devices were operated with a base current of 1 μA and a collector-to-emitter potential of 0.5 V. The collector currents ranged from a maximum of 76.5 μA before irradiation to a minimum of 35 μA after irradiation.

The total ionizing dose (TID), expressed in rad(Si), is a measure of the total of ionizing energy absorbed per unit mass of specimen. The data from the measurements indicate that the reduction in h_{FE} as a function of TID is different for the three different types of radiation. This is expected because equivalent TID does not imply equivalent nonionizing-energy dose, which is primarily responsible for the reduction in h_{FE} via a reduction in the lifetimes of minority charge carriers.

The bromine-ion data exhibit a linear variation in the change of ($1/h_{FE}$) with TID, suggesting that bulk displacement due to nonionizing dosage is the dominant mechanism of damage. Smaller changes in ($1/h_{FE}$) with TID are seen in the electron and γ-ray data. This was expected because a bombarding electron or a Compton electron produced by an incident γ-ray photon imparts much less energy to a lattice atom of Si than does a Br ion of equivalent kinetic energy.

This work was done by John A. Zoutendyk of Caltech, Carles A. Goben of Southern Illinois University, and Dale F. Berndt of Honeywell, Inc., for **NASA's Jet Propulsion Laboratory**. *"Comparison of the Degradiation Effects of Heavy Ion, Electron, and Cobalt-60 Irradiation on Advanced Bipolar Process."*
NPO-17570/TN

FOR ADDITIONAL INFORMATION: *Contact: Director, Technology Transfer Division, P.O. Box 8757, BWI Airport, MD 21240; (301) 621-0100 Ext. 241*
REFER TO THE NUMBER LISTED AT THE END OF THIS ARTICLE

NASA Tech Brief
National Aeronautics and
Space Administration

NASA's Jet Propulsion Laboratory, Pasadena, California

Simple Multiplexing Hand-Held Control Unit

The circuit contains only switches and resistors and requires only two connecting wires.

A simple analog multiplexing concept makes it possible to combine signals from a hand-held control unit so that they can be fed to a robot-control computer over a single pair of wires. The control unit contains no active electronic components.

The multiplexer consists of a series of resistors, each of which is shunted by a single-pole, single-throw switch (see figure). The user operates the switches by pressing buttons or squeezing triggers — for example, to control such robot functions as grasping, releasing, locking position, and emergency stopping. The value of each resistor is the double (or some other convenient multiple) of the value of its predecessor in the series.

A source supplies a constant current to the series of resistors. The voltage across the series varies according to the number of switches that are closed and their positions in the series. Each pattern of switch closures created by the operator produces a unique voltage at the terminal of an analog-to-digital converter to which the control unit is connected. The associated control computer interprets the output of the analog-to-digital converter in terms of the configuration of the switches.

A prototype of the multiplexer that includes three switches has been operated successfully in over 200 hours of system operations. The number of switches that can be accommodated is determined by the signal-to-noise ratio of the current source, the noise induced in the control unit and cable, and the number of bits in the output of the analog-to-digital converter. Because many computer-controlled robots have extra analog-to-digital channels, such a multiplexer can be added at little extra cost.

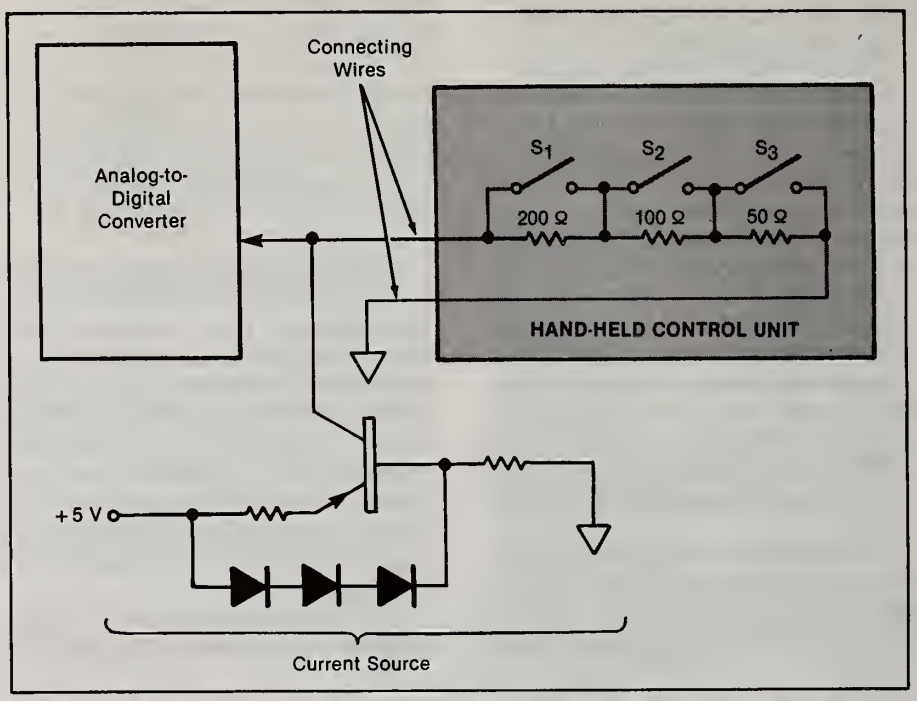

The **Voltage at the Input** of the analog-to-digital converter varies with the number and location of closed switches in the hand-held controller.

Jet Propulsion Lab.
NASA Resident Office
Technology Utilization Officer: Gordon S. Chapman
Mail Stop 180-801
4800 Oak Grove Drive
Pasadena, CA 91109
(818) 354-4849
Patent Counsel: Paul F. McCaul
Mail Code 180-801
4800 Oak Grove Drive
Pasadena, CA 91109
(818) 354-2734
Technology Utilization Mgr. for JPL: Norman L. Chalfin
Mail Stop 156-211
4800 Oak Grove Drive
Pasadena, CA 91109
(818) 354-2240

This work was done by Blake Hannaford of Caltech for **NASA's Jet Propulsion Laboratory**.

In accordance with Public Law 96-517, the contractor has elected to retain title to this invention. Inquiries concerning rights for its commercial use should be addressed to

Edward Ansell
Director of Patents and Licensing
Mail Stop 301-6
California Institute of Technology
1201 East California Boulevard
Pasadena, CA 91125

Refer to NPO-17308/TN.

FOR ADDITIONAL INFORMATION: *Contact: Director, Technology Transfer Division, P.O. Box 8757, BWI Airport, MD 21240; (301) 621-0100 Ext. 241*
REFER TO THE NUMBER LISTED AT THE END OF THIS ARTICLE

NASA Tech Brief
National Aeronautics and
Space Administration
NASA's Jet Propulsion Laboratory, Pasadena, California

Single Electrode Would Control Charge-Coupled Device

Space would be saved and interelectrode short circuits eliminated.

A proposed virtual-phase, interline-transfer, charge-coupled device would use a single gate electrode to control both the interline and intraline transfer of charge. The present version contains two control electrodes: one to transfer charge between the photosites and the shift register, another to transfer charge along the shift register. The contemplated changes in design would eliminate the vulnerability of the present version to electrical shorts between the control electrodes and increase the overall quantum efficiency of the device by eliminating the nonphotosensitive area required for the separation of the electrodes.

Figure 1 illustrates a portion of a buried-channel, linear, virtual-phase, interline-transfer, charge-coupled device according to the new concept. The control electrode includes gate-transfer (GT), charge-barrier (CB), and clocked-well (CW) regions that differ from each other in their concentrations of dopants. The portion of the shift register not in contact with the electrode also contains differentially-doped virtual-well (VW) and virtual-barrier (VB) regions.

Charge would be transferred along the shift register when the voltage on the control electrode is alternated between the gate potentials A and B shown in Figure 2. However, when the potential on the control electrode is raised to C, charge would not be transferred along the shift register; instead, charge would then be transferred from the photosites into the adjacent clocked-well portions of the shift register. Thus, the interline and intraline transfer of charge would be independent of each other, even though they would be controlled by the same electrode. This would be possible because the concentration of negative dopant in the gate-transfer region would be less than that of the surrounding regions.

The gate-transfer region would be made according to the following procedure:

1. Prepare slices according to the standard procedure for the fabrication of virtual-phase charge-coupled devices up to, but not including, the implantation of the buried channel.
2. Implant the buried channel at half the normal dose in all areas.

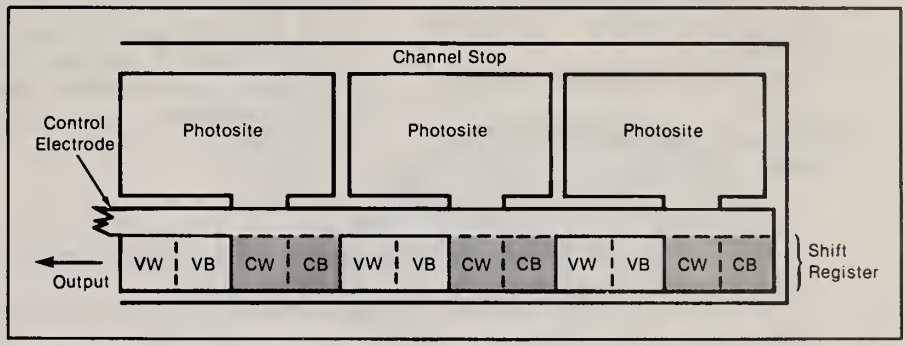

Figure 1. The **Voltage on the Single Control Electrode** would be varied to transfer charge from the photosites to the shift register, or else along the shift register. The two kinds of transfer would be independent of each other.

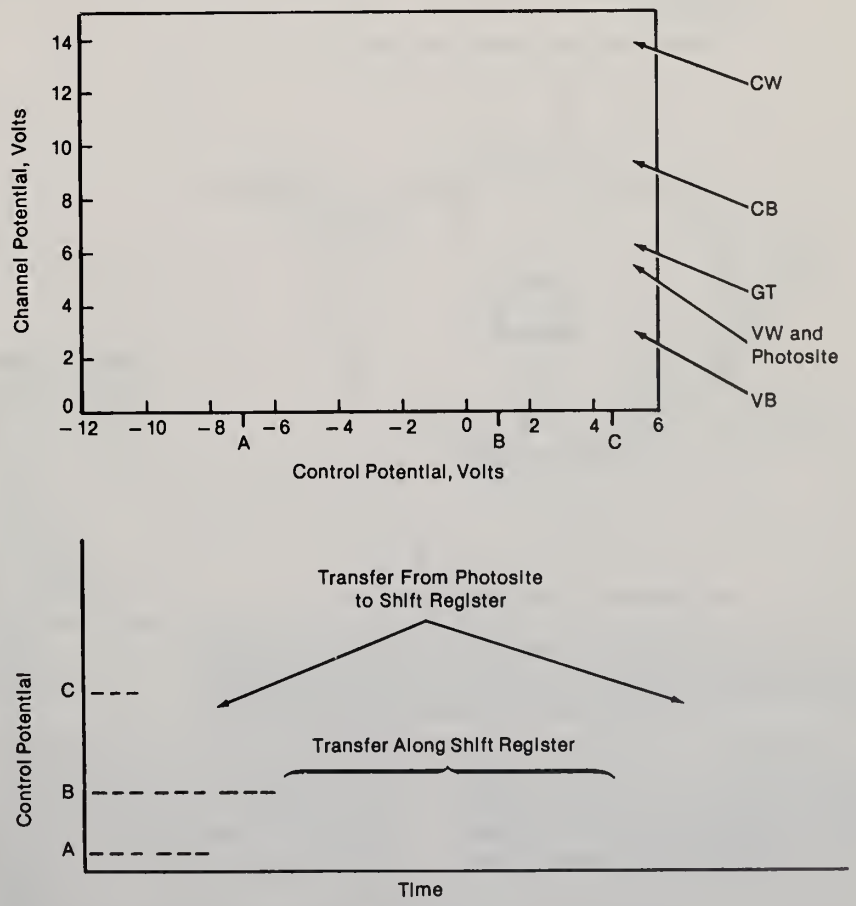

Figure 2. The **Maximums of the Electrostatic Potentials** in each region of the device are shown as functions of the voltage applied to the control electrode.

3. Mask the gate-transfer region and the photosites.
4. Implant the buried channel at half the normal dose.
5. Pattern and implant the clocked-well region according to the standard procedure.
6. Deposit polycrystalline silicon and pattern the control-electrode structure.
7. Mask the virtual-barrier and virtual-well regions.
8. Implant the buried channel at half the normal dose.
9. Continue the standard procedure to completion.

The proposed device could transfer charge from the photosites into the shift register and through to the output. It is also possible to make a device that would transfer charge into and through the shift register to storage at a photosite. This would be done by implanting at twice the standard dose in step 2 and compensating the excess negative dopant in steps 3 and 8.

This work was done by Mark Wadsworth and Robert D. McGrath of Texas Instruments, Inc., for **NASA's Jet Propulsion Laboratory**.
NPO-17313/TN

FOR ADDITIONAL INFORMATION: *Contact: Director, Technology Transfer Division, P.O. Box 8757, BWI Airport, MD 21240; (301) 621-0100 Ext. 241*
REFER TO THE NUMBER LISTED AT THE END OF THIS ARTICLE

NASA Tech Brief
National Aeronautics and Space Administration
Marshall Space Flight Center, Alabama

Licensing Opportunity

SQUID With Integral Flux Concentrator

A slotted superconducting disk concentrates magnetic flux from an external coil.

In an improved superconducting quantum interference device (SQUID), a change in the size and shape of the superconducting ring improves coupling to the external signal coil and eases coil-positioning tolerances. The new device is more rugged and easier to manufacture than are conventional SQUID's with comparable electrical characteristics. SQUID's can be used in magnetometers, ammeters, analog-to-digital converters, and related electronic applications in which high signal-to-noise ratios are required.

A radio-frequency SQUID comprises a low-inductance, strongly superconducting loop interrupted by a Josephson junction. The improved SQUID has a larger, washer-shaped, superconducting loop instead of the usual tiny ring-shaped loop (see figure). The small size of the central hole maintains the required low inductance. Currents induced in the superconductor by the magnetic field of the signal coil exclude the magnetic field of the coil from the superconductor (Meissner effect). Thus, the magnetic field becomes concentrated into the SQUID loop, and the coil and the SQUID are coupled tightly.

The position of the coil is not critical: the coil need only surround the central hole and lie entirely on the superconducting disk. Other coupling devices that were tried proved difficult to fabricate and align. These included integral, multiturn coils fabricated directly over the SQUID loop or slotted superconducting cylinders wound with the signal coil and shaped to concentrate the magnetic flux inside the SQUID loop.

The SQUID could be made with any of various types of Josephson junctions. The variable-thickness (notched) junction has been used successfully. However, a novel, single-step, single-material junction called the "step-function junction" has advantages over junctions that include very thin insulators or other dissimilar materials. The step-function junction is relatively easy to fabricate. It also provides an effective geometry for creating the short, narrow, junction region, the "weak link" that provides the phase shifting in the wave function of the supercurrent. It performs this function over a range of temperatures larger than that of other junctions. The step-function junction is quite rugged because it is less subject to electrical breakdown and galvanic corrosion than are other types of junctions.

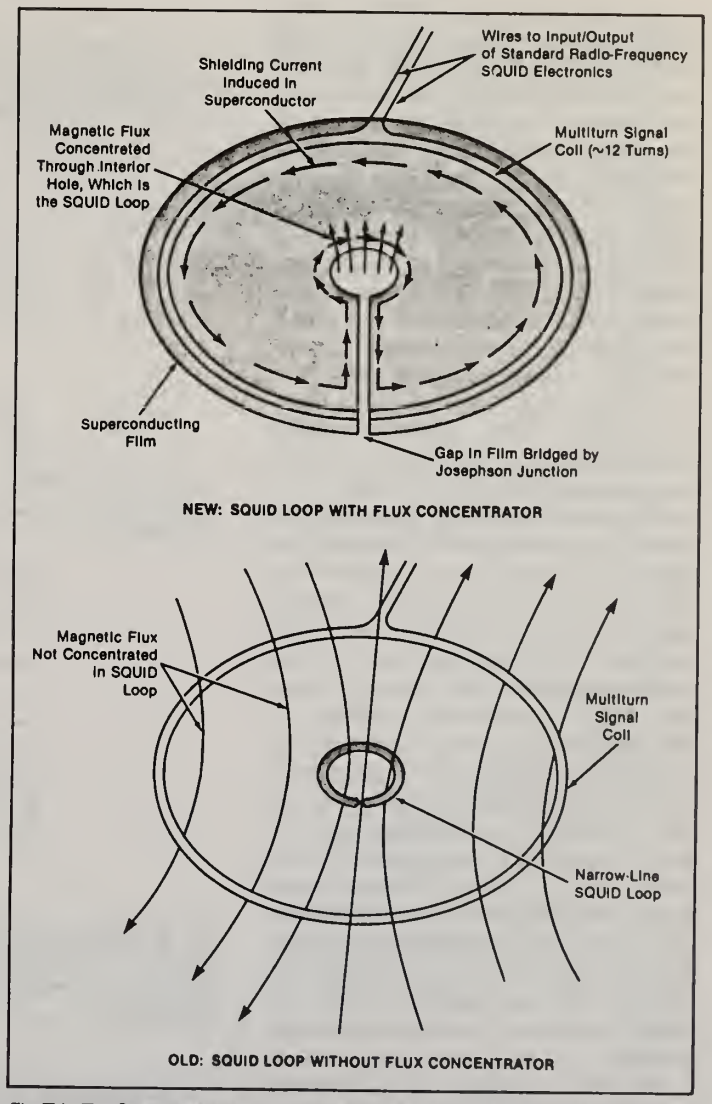

The **Thin-Film Superconducting Flux Concentrator** (above) utilizes the Meissner effect to deflect the magnetic field of the signal coil into the central hole of the SQUID. In the absence of a flux concentrator (below), coupling between the coil and SQUID would be weak because relatively little of the flux would be intercepted by the SQUID loop.

George C. Marshall Space Flight Center
Technology Utilization Officer: Ismail Akbay
Code AT01
Marshall Space Flight Center,
AL 35812
(205) 544-2223
Patent Counsel: Leon D. Wofford, Jr.
Mail Code CC01
Marshall Space Flight Center,
AL 35812
(205) 544-0024

This work was done by Palmer N. Peters and Robert C. Sisk of **Marshall Space Flight Center.**

This invention is owned by NASA, and a patent application has been filed. Inquiries concerning nonexclusive or exclusive license for its commercial development should be addressed to the Patent Counsel, Marshall Space Flight Center. Refer to MFS-28282/TN.

FOR ADDITIONAL INFORMATION: *Contact: Director, Technology Transfer Division, P.O. Box 8757, BWI Airport, MD 21240; (301) 621-0100 Ext. 241*
REFER TO THE NUMBER LISTED AT THE END OF THIS ARTICLE

NASA Tech Brief
National Aeronautics and
Space Administration
NASA's Jet Propulsion Laboratory, Pasadena, California

VLSI Universal Noiseless Coder

Features would include reliability, low weight and power, and small volume.

A proposed universal noiseless coder (UNC) would compress a stream of data signals for efficient transmission in a channel of limited bandwidth. The coder would be noiseless in the sense that the original data would be completely recoverable from the output code. The system would be built as a very-large-scale integrated (VLSI) circuit, which could compress data in real time at input rates as high as 24 Mb/s, and possibly faster, depending on the specific design. The VLSI approach would yield a small, lightweight system that would operate reliably and consume little power.

The conceptual UNC includes a block preprocessor and an adaptive variable-length coder (AVLC) (see figure). The block preprocessor reversibly reformats the input data stream by taking differences between successive data and relabeling the differences. The AVLC can execute any of eight optional code algorithms: namely, backup (in which it puts out the original subblock of n-bit-sampled data), fundamental sequence (in which each nonnegative integer m is converted to a string of m zeros followed by 1), and a combination of fundamental sequence with k-bit sample splitting (in which each n-bit sample is split into a sample of $n-k$ most significant bits and a sample of k least significant bits) with $k = 1, 2, 3, 4, 5$, or 6. The final coded output produced from each block of input data is a block that contains the compressed string of output bits, plus a 3-bit header that identifies the code algorithm, thereby enabling the decoder to reconstruct the original data.

The AVLC includes a code estimator, which chooses the code algorithm that performs best on the current block of input data. The selection is made on the basis of simple arithmetical operations on the sequence of input bits. The code estimator also provides an accurate estimate of the number of bits that the selected algorithm will use to code the current block of input data.

In addition to the subsystems and functions of the conceptual system as described above, the VLSI version would include the following:

- A sensor interface circuit to acquire the input data;
- A host-processor interface to exchange, with a host processor, data related to the control and status of operation — specifically, in regard to the mode of operation and the size of the data blocks;
- A UNC controller to control the compressor and coordinate with the host processor according to the control and status data;
- A ping-pong block buffer to buffer the current and the previous data blocks for the two-level pipelined operation of the UNC compressor;
- An output formatter to convert the compressed data into the desired output format; and
- A link interface to transmit the compressed data onto the output bus.

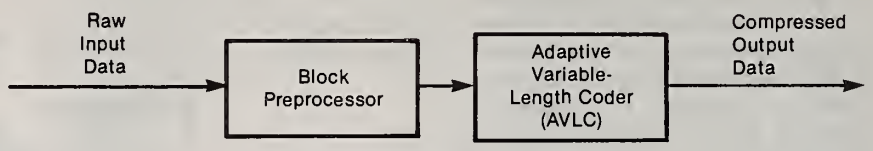

CONCEPTUAL UNIVERSAL NOISELESS CODER

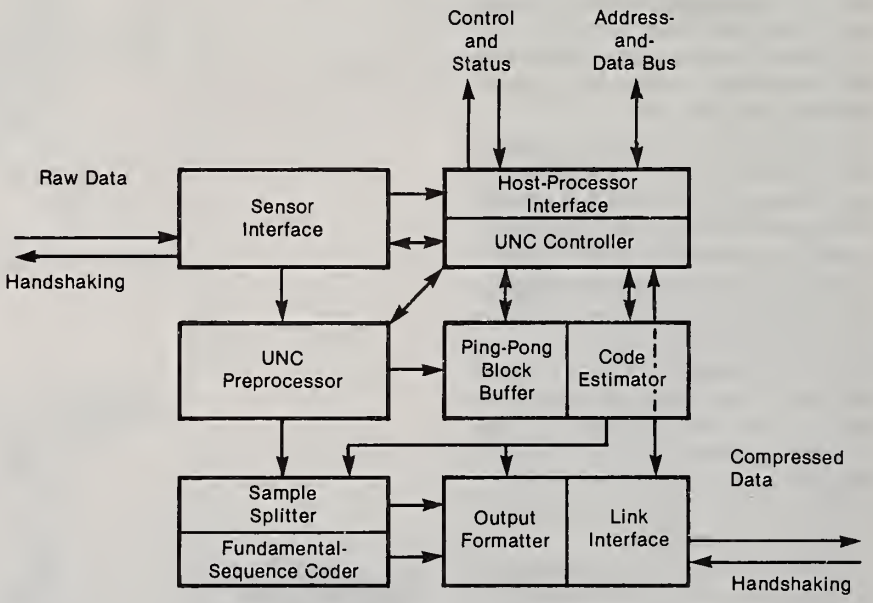

VLSI ARCHITECTURE

The **Universal Noiseless Coder** would be constructed as a single, compact, low-power VLSI circuit chip. The design of the coder would exploit the regularity, modularity, effective interconnections, flexibility, expendability, and concurrence that are principal features of VLSI architecture.

To promote efficiency, the design of the VLSI circuit chip would be made specific to the code algorithms. The entire UNC could be fabricated in a single chip, which would have a worst-case power dissipation less than 1 W.

This work was done by Robert F. Rice, Jun-Ji Lee, and Wai-Chi Fang of Caltech for **NASA's Jet Propulsion Laboratory.**
NPO-17469/TN

FOR ADDITIONAL INFORMATION: *Contact: Director, Technology Transfer Division, P.O. Box 8757, BWI Airport, MD 21240; (301) 621-0100 Ext. 241*
REFER TO THE NUMBER LISTED AT THE END OF THIS ARTICLE

Energy

0235 Solar Photovoltaic Module Achieves Record 20% Efficiency

0236 Fast Reacting Solar Heat Collector Designed: Double-Glased Insulated Box

0237 Zero-Gravity Fuel-Cell Product-Water Accumulator—Water is removed from the fuel cell by capillary action.

Department of Energy

Technology Application

Sandia National Laboratory

Solar Photovoltaic Module Achieves Record 20% Efficiency

A peak solar-to-electric conversion efficiency of 20.3 percent, a new record for a photovoltaic concentrator module, has been achieved by researchers at Sandia National Laboratories. This means 20.3 percent of the solar energy falling on the concentrator module is converted directly to energy. The experimental concentrator module is an arrangement of 12 plastic lenses that concentrate sunlight to 100 times its normal level onto 12 silicon solar cells. It uses several innovations that researchers believe can be adapted commercially in a short time.

The achievement also meets a U.S. Department of Energy (DOE) goal set in 1986 for concentrator efficiency. Sandia is

Technology and design innovations used in the record-setting module include a new silicon concentrator cell with up to 25% efficiency; a transparent cell cover molded directly to the cells
to reduce gridline reflection losses; a new technique of soldering cells directly to copper heat spreaders to reduce costs and improve performance and reliability; use of an anti-reflective coating to improve concentrator lens efficiency.

"Industry should be able to duplicate most of these features very quickly," says Eldon C. Boes, supervisor of Sandia's Photovoltaic Technology Division. He said reaching 20 percent module efficiency with a silicon cell

(Sandia developed a record-breaking 31 percent efficient concentrator cell last year, using silicon and gallium arsenide technology in the same tandem cell. That experimental cell has not yet been readied for module testing.)

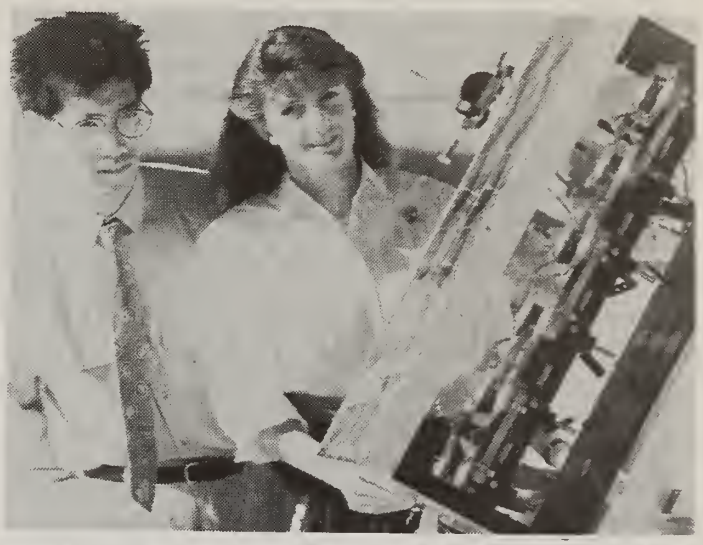

Clement Chiang and Elizabeth Richards show experimental photovoltaic concentrator module used in achieving record 20.3% solar-to-electric conversion efficiency.

Boes expects concentrator modules with Sandia's innovations to achieve 19 to 30 percent efficiency and be on the market at competitive prices within about three years. The economic key to this module type is the use of relatively inexpensive lenses that can multiply the intensity of the sun by several hundred times and focus it on a cell. Without this optical concentrating component, many more expensive cells would be needed to obtain the same power.

The record-setting module uses a low-resistivity silicon cell developed by researcher Martin Green at the University of New South Wales in Australia. The cell - about half an inch square - is essentially module-ready, explains Sandia's Clement J. Chiang, who teamed with fellow-Sandian Elizabeth H. Richards to develop the successful module.

Through a series to contracts and consultations, Sandia played a key role in the cell's development toward the stage where it can be produced by industry.

Another key to the module's efficiency is a prismatic cell cover. The cover deals with a fundamental problem in making cells efficient: the thin metal gridlines that carry current from the cell also block sunlight from falling on the silicon cell surface. The covers bend sunlight away from the gridlines lines to the silicon surface. This allows the use of wider gridlines that more easily carry current generated from cells. "In the past, it was always a trade-off of requirements for metallization against the need for incoming sun," Richards says.

Performance, cost and reliability are all improved by a module design change that eliminated a ceramic insulator between the cell and copper heat spreader, explains Chiang. He studied ways to solder the cells directly to the heat spreader beneath them. Because copper expands five times as much as silicon with heat, the connection had to be strong yet flexible.

The connection has to survive repeated thermal cycling, since the cell and heat spreader will heat up daily, then cool each night. Chiang developed a process for cleaning the surfaces and soldering them together. This promotes good solder "wetting," making the connection more resistant to the heating and cooling cycle. "The method is low cost, takes no fancy equipment and can be easily adapted to mass production," Chiang says.

An anti-reflective layer of magnesium fluoride solution was applied to both surfaces of the Fresnel lenses to increase the amount of light transmitted through the lens. Richards says the measured increase in transmission was about two percent. "It's a small contribution, but at this stage it is an experimental process. We will be exploring more effective and more durable coatings in the future," she says.

Likely initial sues for these photovoltaic developments are in pilot power plants utility companies and small, 10- to 1000-kilowatt stand-alone power systems, explains Boes. A 1000-kW system will provide the electrical needs for about 300 homes. "By gaining markets like this and starting the manufacturing process," he says.

FOR ADDITIONAL INFORMATION: Public Information Division, Code 3161, Department of Energy, Sandia National Laboratories, Albuquerque, NM 87185-5800; (505)844-4207. Refer to announcement 24, No. 8.

NAVY
Domestic Technology Transfer Fact Sheet

Fast Reacting Solar Heat Collector Designed: Double-Glased Insulated Box

A scientist at the Naval Ocean Systems Center, San Diego, California, has designed a heat collector that provides heat from solar energy at high temperatures in a reasonably short time.

A standard double-glazed insulated box is designed as a solar heat collector with black aluminum foil under the glazing to absorb the heat. The foil is corrugated to provide increased surface area to transfer heat to the air contained within the foil. Air causes convective flow into an area containing a finned tube heat exchanger that can hold a small quantity of liquid to be heated. A closed convective air loop is established between the area containing the foil and the finned heat exchanger tube. Hottest air is first exposed to the heat exchanger portion nearest the output so the hottest liquid is always nearest the discharge end. When the high temperature heat is transferred to a small volume of liquid at the top of the heat, high pressures can be generated even though most of the liquid in the heat exchanger is at a lower temperature. The heat exchanger tube is strong enough to support the whole assembly so that the entire insulated box can be rotated to follow the sun without moving the fixed plumbing. These features can be used to increase the efficiency of a solar still. The high temperature pressure reduces the volume of vapor handled for a given volume of distillate.

NASA Tech Brief
National Aeronautics and
Space Administration

Zero-Gravity Fuel-Cell Product-Water Accumulator

Water is removed from the fuel cell by capillary action.

An assortment of documents describes a simple, passive system that removes water formed from the reaction of hydrogen and oxygen in a proton-exchange-membrane fuel cell. Designed for use in zero gravity, the system does not require any machinery or external source of power.

The system works by capillary action and differential pressure. Small wicks transport the product water from the oxygen sides of the cell membranes to a larger wick in contact with a filter (water-separating) plate. The filter plate retains the oxygen, and the small differential pressure of oxygen across this plate forces the water through the plate and into a channel.

From the channel, the water passes through a check valve into a spongelike sorbent material that occupies part of the volume of a detachable canister. As it absorbs water, this material expands into the remaining dry volume of the canister. A quick-disconnect flange at the end of the canister opposite the check valve facilitates the removal of the water for reuse. The water can also be discarded via a vacuum port at the end near the check valve.

To allow for expansion of the sorbent material, the pressure in the dry volume of the canister is kept below that of the sorbent/water combination. The sorbent and canister can be sized to hold any convenient amount of water. As a preliminary guide to design, the capacity is chosen to be sufficient to hold the water accumulated during 8 h while operating at a power of 300 W.

This work was done by Thomas P. Barrera of **Johnson Space Center.** *"Zero-Gravity Fuel Cell Water Storage Accumulator."*
MSC-21351/TN

FOR ADDITIONAL INFORMATION: *Contact: Director, Technology Transfer Division, P.O. Box 8757, BWI Airport, MD 21240; (301) 621-0100 Ext. 241*
REFER TO THE NUMBER LISTED AT THE END OF THIS ARTICLE

Engineering

0238 Integral Structural Damping

0239 2 Degrees-Kelvin Technology

0240 Superfluid Check Valve

0241 Drill-Split Fragmentation-A New Primary Excavation Method

0242 Fire Endurance of Paneled Steel Stopping Evaluated

0243 High-Pressure Inward-Facing Drum Sprays Reduce Dust Levels on Longwall Mining Sections

0244 Freezer Alarm (Licensing Opportunity)

0245 Metallized Synthetic Cables (Licensing Opportunity)

0246 Security Device for Safes (Licensing Opportunity)

0247 Method of Determining the Orientation of a Moving Platform

0248 Applying Thermal Gradients to Control Vibrations—Thermal actuators might be used to stabilize large structures.

0249 Capillary-Pumped Heat-Transfer Loop—A new system offers advantages of a heat pipe without its limitations.

0250 Cryogenic Shutter Mechanism—A device minimizes heating by external and internal sources. (Licensing Opportunity)

0251 Effects of Turbulence on Ignition—The enhancement of evaporation by turbulence could be used to enhance ignition.

0252 Glove Box for Hazardous Liquids-A conceptual box is designed for safe handling and cleaning.

0253 Honeycomb-Fin Heat Sink—This strong, lightweight part increases the effectiveness of forced-air cooling. (Licensing Opportunity)

0254 Two-Pipe Heat-Transfer Loop—Liquid and vapor travel in separate tubes.

Software

0255 MIDAS Program Aids Designer in Creating Fleet Mooring Assemblies on Computervision

0256 Calculating Transonic Flows About Airfoils—Small disturbances and aeroelastic effects can be simulated.

Testing & Instrumentation

0257 Simulator of Rain in Flowing Air—Drops are injected into slowly flowing air, which is then accelerated.

0258 Instrumentation System for Precision Measurements of Flow Vectors

0259 Fiber Optic Probe for Measuring Downhole Detonation Time and Velocity

0260 Subminiature Hot-Wire Probes—Flows can be measured with higher resolutions.

0261 High-Temperature Strain-and-Temperature Gauge—A two-element gauge is used alternately in two different bridge circuits to measure both temperature and strain.

Other Items of Interest

0267 Convergent-Filament Nonmechanical Pump—The restrictions imposed by capillaries are avoided.

0273 Polymeric Electrolytic Hygrometer for Harsh Environments—An improved design reduces vulnerability to organic vapors and dust.

0278 Fracture-Mechanics Analysis on a Distributed-Memory Parallel Processor

Technology Fact Sheet
U.S. Air Force

Integral Structural Damping

SYNOPSIS:

Integral structural damping entails laminating a layer of rubber-like damping material between layers of metallic sheets as indicated in the picture on the right. The adhesive material is a nitrile rubber phenolic, visco-elastic film adhesive. This adhesive material dissipates sonic vibrational energy and bonds the metal sheets together. This reduces metallic fatigue which in turn increases service life. This technology is applicable to secondary structures, such as flaps and spoilers, which are subjected to high fluctuating pressure loads caused by the turbulent boundary layer.

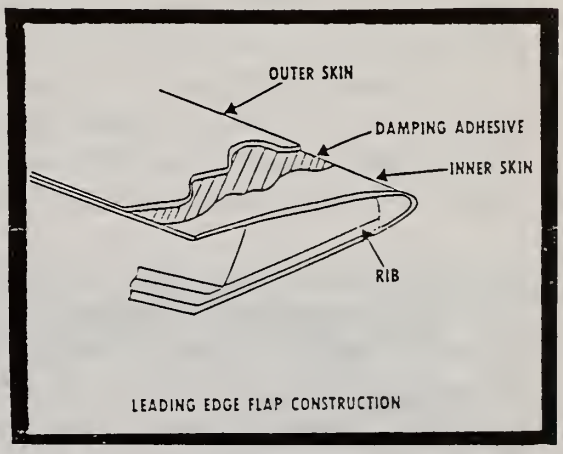

LEADING EDGE FLAP CONSTRUCTION

APPLICATIONS:

Current: A-7D Center Section Leading Edge Flap
F-111 Outboard Spoiler (preferred spare)
Future: A-10 Inlet Extension Ring

AIR FORCE R&M 2000 GOAL HIGHLIGHTS:

Increased Combat Capability: A-7, no detectable flaws after 120,000 hours of testing
Decreased Manpower Requirements: F-111, field level maintenance reduced to remove and replace
Decreased Costs: F-111, $5M savings over ten years

BENEFITS/DRAWBACKS:

The main benefit is the increased service life which comes from the reduced structural fatigue. The A-7D center section leading edge flap uses integral structure damping. The original design failed at 1,400 hours of vibro-acoustic testing. The redesign using the damping adhesive went through 120,000 hours of testing with no detectable flaws. The F-111 outboard spoiler also uses this technology. SM-ALC expects a $5M savings over the next ten years by using this technnology in a preferred spare. Field level maintenance has been reduced to remove and replace actions. A drawback is the potential added weight if multiple layer buildup is required.

DOCUMENTATION:

Damped Secondary Aircraft Structures Resists Vibro-Acoustically Induced Damage, Design News, 17 June 85

Aerospace Structures Technology Damping Design Guide; Vol I Technology Review (NTIS #AD-A178 313/3), Vol II Design Guide (NTIS #AD-A178 314/1), Vol III Damping Material Data (NTIS #AD-A178 315/8)

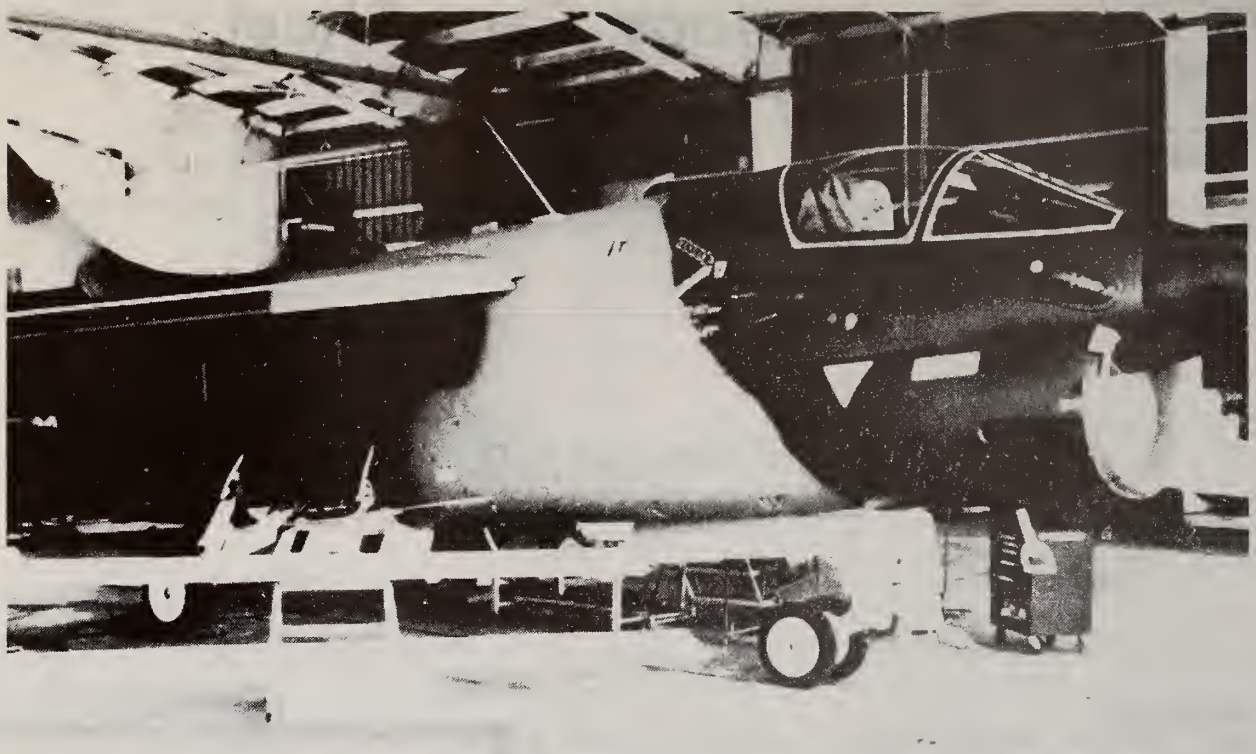

LEADING EDGE FLAP – A-7D

TECHNOLOGY CONTACT:

Office: AFWAL/FIBAA (Lt Kathy Prescott)
F-111
AUTOVON: 785-5664
Comm: (513) 255-5664

USER CONTACT:

SM-ALC/MMIE(Mr Jack Jones)
F-111
633-5533
(916) 643-3810

This TechTIP report was produced as part of the Technology Transfusion Program at the Air Force Coordinating Office for Logistics Research (AFCOLR/TT). Determining the feasibility of using this technology in a particular application requires a thorough evaluation of system requirements and the capabilities provided by the technology. For further information on the subject technology, please contact the listed organizations. Comments or questions about the Technology Transfusion Program are welcomed and should be addressed to "TechTIP", AFCOLR/TT, Wright-Patterson AFB OH 45433-5000 or call AUTOVON 785-1607, COMMERCIAL (513) 255-1607.

Fermi National Accelerator Laboratory

2 Degrees-Kelvin Technology

Fermilab's status as a "World Center for Industrial-Scale Superconductivity" means a constant application of cryogenics expertise to newly arising cryogenics problems, and subsequent breakthroughs in cryogenics technologies.

Halving the "ordinary" 4° Kelvin temperature used with helium superconductors can provide substantially higher magnetic fields, useful for both Medical Research Imaging (MRI) and accelerator magnets. Fermilab is now involved in a multi-front attack on this possibility, including plans for a **magnetic refrigerator** for 2° Kelvin helium refrigeration, which incorporates a **vacuum pump compressor** using identical coolant/sealant throughout the system, and a **superfluid check valve**.

The 2° Kelvin **magnetic refrigerator** will be used in cooling the TEVATRON Collider's low-beta quadrupole magnets. The new refrigerator system includes new power-lead technology, some valving, heat exchangers, and special features for handling superfluid and vacuum systems (see below). Unlike existing technology, which requires the use of large vacuum pumps and a sub-atmospheric bath of liquid helium to obtain 2° Kelvin temperatures, Fermilab's refrigerator design eliminates the high probability of air leakage into the system with that leakages' subsequent problems.

Previous technology for low-temperature helium refrigeration used **vacuum pumps** without oil flooding for pump cooling and sealing because removal of the oil from the pump's helium stream proved difficult. Consequently, the high heat of helium compression severely limited the pumping rate. By using the Fermilab-conceived oil-flooding technique, large flow rates of helium can be pumped without overheating the equipment, greatly improving vacuum-pump-system economics and substantially reducing maintenance and down time. The bulk of the oil is readily removed from the helium stream after it leaves the vacuum pumps, but a mist remains which cannot be eliminated as easily. By sending this oil-contaminated helium directly to the helium compressors of the cryogenic refrigerator and compressing it to the high pressures (7-20 ATM) required for the refrigerator, the oil may be removed with conventional oil-removal filters operating at high pressure. This technique requires that the same type of oil be used in all stages of the vacuum pump and compressor systems.

This technique could be useful in sub-atmospheric pressure operation of cryogenic refrigerants, particularly in new projects where industrial-scale superconductivity is a factor, such as plasma fusion containment magnets and industrial superconducting-magnet energy-storage projects.

FOR ADDITIONAL INFORMATION: Office of Research and Technology Applications, Fermi National Accelerator Laboratory, P.O. Box 500, MS 208, Batavia, IL 60510; (312)840-3333. Refer to FAA-534/TN.

Technology Application

Fermi National Accelerator Laboratory

Superfluid Check Valve

A superfluid check valve has been developed at Fermilab. Helium superfluid quickly oozes out of even the smallest cracks. The valve is used to prevent helium transfer between the superfluid phase (Helium 2) and normal liquid helium, while concurrently allowing for the transfer of fluid. The valve mates two very smooth conical surfaces manufactured on a numerically-controlled lathe. These surfaces provide for a long isolation film of helium (about 2.5 cm) for insulation in contrast to previous helium valves where the seal is a line contact.

This valve should have applications in situations where superfluids are used to cool low-temperature superconductors to achieve higher critical fields.

FOR ADDITIONAL INFORMATION: Office of Research and Technology Applications, Fermi National Accelerator Laboratory, P.O. Box 500, MS 208, Batavia, IL 60510; (312)840-3333. Refer to FAA-503/TN.

Drill-Split Fragmentation-A New Primary Excavation Method

Objective

Provide an economic alternative to drill-blast excavation with the same ability to excavate openings of varied orientation, shape, and size.

Approach

Develop an efficient, adaptable, mechanical excavation machine that produces unconfined tensile failure in rock.

How It Works

A drill-split fragmentation machine that combines a drill and a unique splitter has been developed. The drill and splitter are mounted on a carriage that positions the splitter in a hole immediately after it is made by the drill. The splitter creates force loads that cause the rock to fragment, and the process is repeated for excavation.

The unique splitter applies both radial and axial loads to the rock mass, which produces an excavation action comparable to pulling a plug. This excavation action distinguishes the radial-axial splitter from typical demolition splitters, which require a free surface parallel to the axis of the splitter toward which to break rock.

The splitter is composed of three concentric rock-breaking components–the feather, the wedge, and the thrust rod. It is powered hydraulically by a cylinder that contains two independent double-acting pistons. In operation, the splitter is securely anchored in the drill hole by a radial load generated by drawing the wedge into the feather, an operation similar to the action of a mechanical expansion shell rockbolt. The thrust rod is then extended to push against the end of the drill hole, which develops an axial load.

The combined effect of the radial and axial loads produces a tensile stress field in the rock. The tensile stress field is centered at and parallel to the drill hole axis. A radiating fracture results that initiates at the feather-rock interface and propagates radially in a plane roughly perpendicular to the drill hole. The fracture finally diverges from that plane to surface around the drill hole at a radius that averages 3.5 times the depth at which the fracture was initiated.

The ability of the drill-split fragmentation machine to excavate openings of varied shape, size, and orientation results from several factors. The foremost factor is the way the splitter operates. Unlike most mechanical excavation machines, the radial-axial splitter reacts the forces it generates internally. As a result, the tool does not use the great chassis weight or stabilizing rams required by other mechanical excavation machines. Instead, it is a small device that can be adaptively mounted as required by differing excavation scenarios. Another factor is the flexibility to optimize the splitting tool size to meet excavation requirements; i.e., large tools for large projects and small tools for small projects. The final important factor is the demonstrated ability of the tool to work in rock from low to high strength, allowing it to be used in excavation projects that encounter different rock strengths.

Test Results

Performance was evaluated through a series of tests conducted in a variety of materials, including limestones, granite, and concrete. From these tests, relationships were established between the forces of excavation and the depths at which breaks were made. On average, the radial and axial forces are proportional to the break depth raised to the 1.5 power. The average quantity of material removed by a break was proportional to the break depth raised to the 3 power.

Simulated drifting experiments were performed in large concrete and limestone blocks. These tests confirmed expectations that the fracture follows the path of the least resistance, and irregularities can produce break results that deviate from the norm. Although these simulated drifting experiments demonstrated the ability of the radial-axial splitter to effectively accomplish this most difficult of excavation operations, it was at reduced efficiency. However, testing also demonstrated that by taking advantage of natural weaknesses in the rock mass, such as bedding, the efficiency of the splitter is increased many times. In the laboratory tests, drill holes ranged from 5/8 to 1-5/8 inches in diameter. The corresponding splitter load-generating capacity over this diameter range was from 6,500 to 71,000 lb (axial) and from 31,000 to 345,000 lb (radial).

Underground field tests were conducted in a limestone

Schematic detail of radial-axial splitter (right) and underground tests of radial-axial splitter (below).

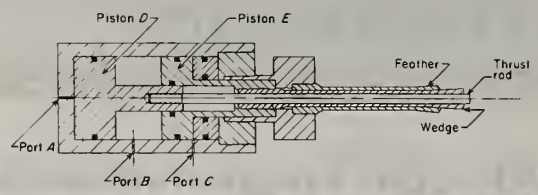

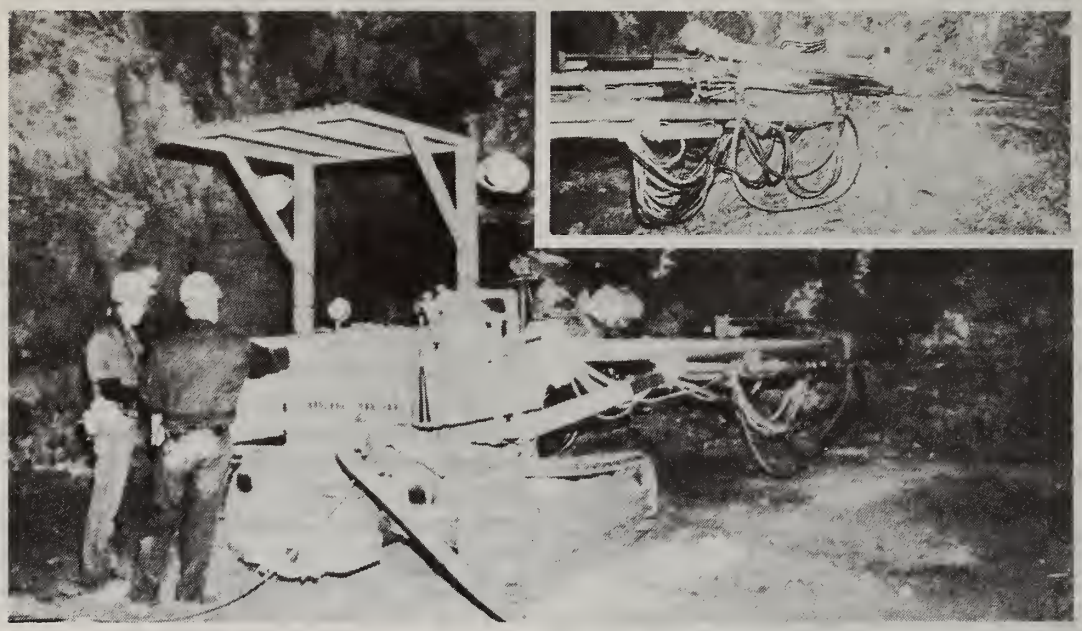

mine in a 23-foot-high, 40-foot-wide blind heading. The radial-axial splitter used in this test operated in a 3-inch-diameter drill hole and generated up to 270,000 lb of axial and 630,000 lb of radial load at 3,000-psi hydraulic operating pressure. The splitter and an air-powered rotary percussive drill were mounted together on a carriage that permitted rapid operation and smooth tool handling. The assembly was retrofitted on the boom of an air-track crawler frame for mobility. Splitter power was generated by a 2-hp, air-driven hydraulic pump added to the crawler unit.

During the underground field test, the drill split fragmentation machine performed well. In about 100 repetitions of the drill-split process it mined approximately 125 tons of ore, or an average of 1.25 tons per break. This 1.25-ton-per-break average was greater than that predicted by empirical relationships developed in the laboratory where the ratio of the surface fracture radius to breaking depth was 3.5.

The average depth of break was 10 inches and the average breakout mode loads were 65,000 lb (axial) and 170,000 lb (radial). The majority of the rock produced fell into a size range from 20 to 300 lb. Mucking of the heading was accomplished with the mine operation's normal mucking equipment, front-end loaders with 6-yd^3 buckets.

The radial-axial splitter cost $10,000 (1988 dollars) to build, and the entire crawler retrofit including the splitter, indexer (carriage), and crawler modifications cost under $25,000 (1988 dollars). The radial-axial splitter is a safe, easy-to-operate excavation tool that can be made larger or smaller as excavation needs dictate. The tool may be used singly or in multiple units because of its nonviolent fragmentation nature and minimal impact on the mining environment. Drill-split fragmentation is a flexible excavation method that can be adapted to meet a broad range of mining requirements.

Patent Status

The U.S. Department of Interior is applying for a patent on this development.

For More Information

The following U.S. Bureau of Mines Reports of Investigations (RI's) contain development and testing data on drill-split fragmentation techniques and the radial-axial splitter: RI 8722, "Laboratory Testing of a Radial-Axial Loading Splitting Tool" and RI 9071, "Capability Evaluation of the Radial-Axial Splitter." For a free single copy of these reports or for additional information on the drill-split fragmentation, contact the principal investigator for this research

Sterling J. Anderson
Twin Cities Research Center
U.S. Bureau of Mines
5629 Minnehaha Avenue South
Minneapolis, MN 55417-3099
(612-725-4564)

Fire Endurance of Paneled Steel Stopping Evaluated

Objective

Compare the fire endurance of paneled steel stoppings with that of traditional concrete block stoppings.

Background

Permanent stoppings or partitions are used in mines to separate ventilation airways. The ability of stoppings to retain their structural integrity for a minimum length of time under fire conditions and prevent the spread of flame and toxic combustion products to an adjacent airway is critical. The success of miners in reaching safety during a fire depends largely on the presence of uncontaminated airways.

Traditionally, permanent stoppings for coal mines are constructed of concrete blocks. Recently, paneled steel stoppings that satisfy many of the requirements demanded of permanent stoppings, such as incombustibility and strength, have been introduced. Their use also introduced concerns such as the ability of a steel stopping to maintain its ventilation control function when exposed to a fire and the potential that the fire could transmit enough heat through the stopping to ignite combustible materials on the unexposed side. To address these concerns, the Bureau of Mines investigated the fire endurance of galvanized steel and concrete block stoppings.

Approach

Full-size (6- by 18-foot) stoppings were located in a noncombustible frame in a crosscut of the Bureau's Bruceton (PA) Experimental Mine. The block stoppings were constructed with 8-inch-thick, hollow, two-cell concrete blocks laid with wet mortar joints. The commercial galvanized steel stopping was assembled from telescopic panels with the gaps between the panels and the perimeter sealed with a water-glass-based paste. The airflow past the crosscut was 34,000 cfm. A 7-foot-high by 20-foot-wide by 85-foot-long area behind the test stopping was isolated from the airflow and downstream combustion products.

The stoppings were subjected to a 1.3-megawatt liquid-fuel tray fire for 70 minutes. The 10-inch-wide, 10-inch-deep, 16-ft-long steel tray was positioned at the base of the stopping. Sensors monitored stopping surface temperatures and air temperatures. Video cameras were used to determine if flame or smoke penetrated the stopping during the tests.

Typical tray fire used to evaluate fire endurance of stoppings.

Test Results

Peak surface temperatures on the fire side of the stoppings exceeded 800° C. The concrete block stoppings withstood the intensity of the fire for the duration of the test and prevented the penetration of flame and smoke. In spite of the appearance of a vertical crack (about 0.25 inch wide) on the fire side of the stopping, the temperature of the unexposed side of the block stopping never exceeded 80° C.

The galvanized steel stopping was undamaged by the fire and also prevented the passage of flame and smoke. The maximum temperature of the unexposed steel stopping surface was 490° C. The hottest air temperature near the roof and 1 foot from the unexposed surface was 150° C. The heat energy transmitted from the hot unexposed side of the steel stopping to the region behind the stopping was mainly by radiation. Owing to the high temperature of the unexposed surface of the steel stopping, combustible material should not be placed in contact with the stopping surface. A 0.75-inch-thick coating of construction plaster applied to the fire side of the steel stopping reduced the quantity of heat transmitted across the stopping by about 50%.

For More Information

Details of the experimental test procedure and results of this research are described in U.S. Bureau of Mines Report of Investigations (RI) 9207, "Fire Endurance of Mine Stoppings." For a single free copy of this RI, write to the Bureau's Publication Distribution Section, Box 18070, Cochrans Mill Road, Pittsburgh, PA, 15236-0070.

For additional information about this subject, contact

Charles P. Lazzara
Pittsburgh Research Center
U.S. Bureau of Mines
Box 18070, Cochrans Mill Road
Pittsburgh, PA 15236-0070
(412-892-6628)

High-Pressure Inward-Facing Drum Sprays Reduce Dust Levels on Longwall Mining Sections

Objective

Control shearer-generated airborne respirable dust on longwall mining sections.

Approach

Previous Bureau studies have shown that using high-pressure water can have a significant impact on the amount of airborne dust released into the face airflow while cleaning and controlling the airflow in the immediate cutting zone. The basic concept to improve the drum water spray system was to utilize high-pressure (1,200 psi) inward-facing drum sprays to improve the dust knockdown efficiency of the spray system and confine the dust to the face area. This system would minimize the exposure of the shearer operator through dust avoidance and decrease face dust levels by suppressing the amount of respirable dust that becomes airborne.

System Design

In-mine tests were designed to provide information that would permit evaluation of the operation with different spray orientations and water spray pressures. This was achieved by comparison with a conventional baseline wet-cutting system consisting of 26 low-pressure bit sprays, located on the bit blocks to provide pick-point flushing. Total drum water flow was 60 gpm and was maintained continuously throughout all tests. The high-pressure inward-facing drum water spray system consisted of sprays located in each bit block, oriented 15° and 30° toward the face. The inward-facing water spray system was operated at either 800 or 1,200 psi.

The shearer water system was modified to incorporate the equipment required to control and monitor the water pressure and flow for the test conditions desired. The test drums were designed and fabricated for bit blocks with three spray nozzles: one oriented radially toward the bit tip (0°), one 15° toward the coal face, and one 30° toward the coal face (fig. 1). Each location was tapped to accept either a 0.25-inch NPT nozzle or a pipe plug. Three different sets of spray nozzles were used during the tests. A jet spray with a 0.060-inch-diameter orifice and oriented at 0° was used to simulate the original system, which operated on mine water pressure of 400 psi at the shearer. A 0.036-inch-diameter orifice was used for operation at 1,200 psi at both the 15° and 30° spray orientations, and a 0.038-inch-diameter orifice was used at 800 psi for both orientations. The two high-pressure nozzles, both cone sprays, were sized to provide 30 gpm per drum (0.7 gpm per nozzle).

Test Results

All dust concentrations were measured with personal gravimetric samplers. Control efficiencies are expressed as a percentage reduction in respirable dust concentrations as compared to the conventional wet (baseline) system. All dust concentrations reflected operating time, not total

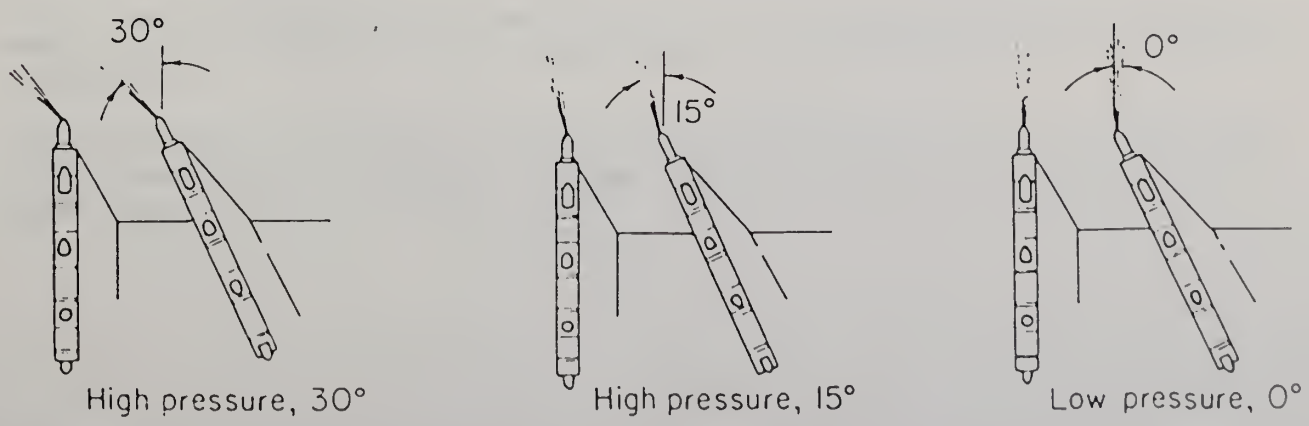

Figure 1.-Test drums were designed and fabricated for bit blocks with three spray nozzles, each with a different orientation, to improve dust knockdown efficiency and confine dust to the face area.

shift time, and were not representative of face worker full-shift respirable dust exposures.

Based on the overall average, the most effective spray system is the 30°, 800-psi configuration. Not only was the reduction greater (39 pct), but the concentration was lower at all sampling sites using this configuration. The average intake dust levels along the face, as measured at support 10, were reduced approximately 45 pct with the 30°, 800-psi system. This indicates a decrease in dust from the face conveyor and stageloader as a result of the 30° spray system and may show that at the higher pressure (1,200 psi) water may not mix with the coal as well as does the water under 800-psi pressure.

A representative number of samples were selected from the overall data set and analyzed for the quartz dust suppression capabilities of the various spray arrangements. Spray arrangement and water pressure level appeared to have no selective impact on quartz dust. Methane levels at the machine and at the tailgate were also monitored. Spray arrangement and water pressure level appeared to have no impact on methane levels.

The system could probably be optimized to reduce shearer operator exposure by using dual pressures. With this arrangement, both drums would use the 30°, 800-psi system during cleanup passes. The cutting passes would use a 30°, 1,200-psi system on the lead drum and a 30°, 800-psi system on the trailing drum.

Negative Impacts

Experience gained during the tests showed that there are some constraints in the application of the high-pressure spray system. The most objectionable, from an operations standpoint, is spray clogging because of the small orifice sizes used. All spray systems can clog, but the test system may be more prone to do so. Another constraint is the preparation of the drum prior to installation. Drums are a constant potential source of water contamination. Rust particles and weld spatter particularly can clog the nozzles. The drum water passages should be lined with stainless steel where possible, and the drum should be thoroughly flushed before installation.

Cost

A longwall shearer can normally be modified to incorporate a high-pressure inward-facing spray system at moderate cost to the mine. High-pressure hose normally costs 30 pct more than lower pressure hose. The difference in price between the standard drum design and the high-pressure design is approximately 15 pct. The cost of some equipment such as bit blocks, bits, spray nozzles, etc., will not change for the high-pressure system. The major expense is the high-pressure pump, if one is not already available. The pump cost will vary depending upon the pressure-volume rating required but will probably remain the greatest expenditure for the modification. These figures represent the additional cost for material required to accommodate the high pressure.

For More Information

Technology News issues 283 and 298 contain additional information on the ventilated drum and water-jet assisted cutting concepts. Free single copies can be obtained by contacting the Office of Technology Transfer, MS 6201, U.S. Bureau of Mines, 2401 E Street, NW., Washington, DC 20241-0001 (202-634-1224).

Further details or additional information about this development may be obtained by contacting the technical project officer for this project:

Robert A. Jankowski
Pittsburgh Research Center
U.S. Bureau of Mines
Box 18070, Cochrans Mill Road
Pittsburgh, PA 15236-0070
(412-892-6691)

U.S. Navy Fact Sheet

Licensing Opportunity

Freezer Alarm

This invention is an alarm device to audibly or visually (or both) signal the "over-temperaturing" of a cold chamber such as a domestic freezer.

Inexpensive, simple devices that detect and announce the failure of a cold chamber to maintain its temperature are not currently available. Loss of cooling may be due to a variety of causes. Some causes are power outages, which may go unnoticed in the absence of attendants; malfunctioning or non-operating refrigeration systems, incomplete door closure, leaking gaskets in closed doors, or improper resetting of a thermostat following a defrost cycle.

The invention disclosed here will automatically announce, by a continuing audible and/or visual signal, that a cold chamber has not maintained a desired sub-ambient temperature. The signal itself is an intermittent beep and/or a panel light from a light emitting diode.

The heart of this invention is a shape memory alloy such as Nitinol. This allow recovers its previously set-in shape by being warmed. The temperature for shape recovery can be arbitrarily pre-selected. As an example, it could be selected to recover its shape when the alloy reaches a temperature of +10 degrees C and in so doing, close an electrical curcuit.

The battery which powers this circuit may be chosen from the large variety of those commercially available and already used for similar long life, low power uses.

The invention has economic advantages in that it can be mass produced at very low cost. This feature should be attractive to users of domestic food freezers. Such domestic and commercial freezers often contain significant quantities of food which is perishable, which may be subject to spoilage, and to causing food poisoning (as a result of brief periods of elevated temperatures). Prompt alarms would save the food and could preclude troublesome clean-ups following freezer failures.

Since these systems utilize an independent power (battery) source they are independent of an external electrical power failure. Their maintenance cost is minimal, limited to a new battery every few years. Furthermore, in the event of an external power failure this alarm system indicates maintained temperature within the chamber without the necessity of opening the chamber door to visually inspect the freezer contents.

The temperature of alarming can be set, within limits, by selecting the Nitinol alloy composition. Alarm activating temperatures for cold chambers can set for temperatures from - 30 degrees C to + 20 degrees C.

FOR ADDITIONAL INFORMATION: For information on licensing of this subject, contact the Naval Surface Warfare Center, Mr. Ramsey D. Johnson, Code D211, Naval Surface Weapons Center, Silver Spring, MD 20903-5000.

U.S. Navy Fact Sheet

Licensing Opportunity

Metallized Synthetic Cables

The cables have been developed, primarily as neutrally buoyant undersea cables for short data link applications such as sonobuoys, which are light in weight, flexible, strong and inexpensive. The most advantageous configuration for such cables consists of a multifilamentary core of strong, synthetic, small diameter (several um thick), lightweight fibers such as graphite, Kevlar, or similar material, which serves as the strength member of the cable. The individual fibers are coated with a conducting element, such as copper, aluminum, nickel, etc., using a combination of electroless and electrochemical deposition techniques. A vapor deposition technique can also be used. The metal coating is on the order on one um thick. All of the electrical conductivity is provided by the metal coating. The thickness of the coating and the number of fibers used can be adjusted such that an acceptable signal attenuation is achieved with minimum use of heavy metallic elements. A practical cable might consist of many such cable elements.

The patent also illustrates the advantage, in the undersea application, of using such a cable with a seawater return path at lower frequencies (approximately less than one MHz) thereby yielding an additional reduction in weight and size in comparison to a conventional copper cable return path.

Although originally developed as an undersea cable, other areas of potential use exist. Space based systems put a premium on weight and NASA has expressed interests in such cables for deploying experimental instrument packages down to a lower earth orbit from an orbiting space shuttle or space station. The fact that such fibers can be easily insulated and woven into fibric-like materials, leads to other specialized application such as active heating elements in special clothing, as in space suits, bullet proof vests, and winter army field-jackets and gloves.

Techniques for metallizing synthetic fibers are well established. Several companies in the United States have coated bundles of synthetic fibers in lengths greater than one hundred feet. The metallization, whether achieved by chemical or vapor deposition, is a continuous process and there is no limit to the available length. Calculations of signal attenuation in various configurations are part of this patent and the results agree with handbook values for conventional cables.

These metallized synthetic cables and conductors will have applications, (i)wherever size and weight are primary concerns, such as at sea and in space, and where the losses associated with conductors made with materials other than solid copper are acceptable, and (ii), in lightweight heating elements for clothing where the greater resistance is desirable.

PATENT STATUS: United States Patent No. 4,518,632, issued May 21, 1985.

PUBLICATIONS: 1. "Metallized Synthetic Cable," T. E. Jones and T. R. Ogden, Materials Letters 2, Number 5B, 462 (1984). 2. "Synthetic Conducting Materials and Undersea Cables," NOSC TN 1311, (Technical Note of the Naval Ocean Systems Center, available DTIC), September 1983.

FOR ADDITIONAL INFORMATION: T. E. Jones, Code 633, Naval Ocean Systems Center, San Diego, CA 92152-5000; (619)553-1594.

U.S. Navy Fact Sheet

Licensing Opportunity

Security Device for Safes

This device is an improved electronic security indicating attachment for use with safes/vaults which provides an indication that a door has been opened and also whether a closed door is properly secured.

Various types of devices have been designed for indicating, in numerous ways, whether a safe/vault has been properly secured. However, none of the earlier designs provide for a construction where the attachment can be readily attached to the safe/drawer and require low power usage.

This device readily lends itself to being easily attached to a door/drawer and because of its low power needs, it uses a simple battery pack for its power supply and minimal servicing such as merely replacing the battery. The device is designed to be an inexpensive, adaptable aid to safe security that can be attached to almost any safe. The device turns itself "on" when the safe is opened and turns itself "off" when the safe is properly secured. This automatic on/off feature conserves battery energy.

The safe/vault security device consists of a power supply, a means for sensing the position of the drawer, an audio alarm, and a visual door status indicator. A micro-processor is electrically connected to the power supply, the sensing means, and to the indicating and detecting means. The drawer sensing unit actuates the audio/visual alarm indicator when the drawer/door is opened or when the closed drawer/door has been improperly or properly secured. This security device could be made virtually "tamper proof" by building it into the safe. Figure 1 highlights the various features of the device.

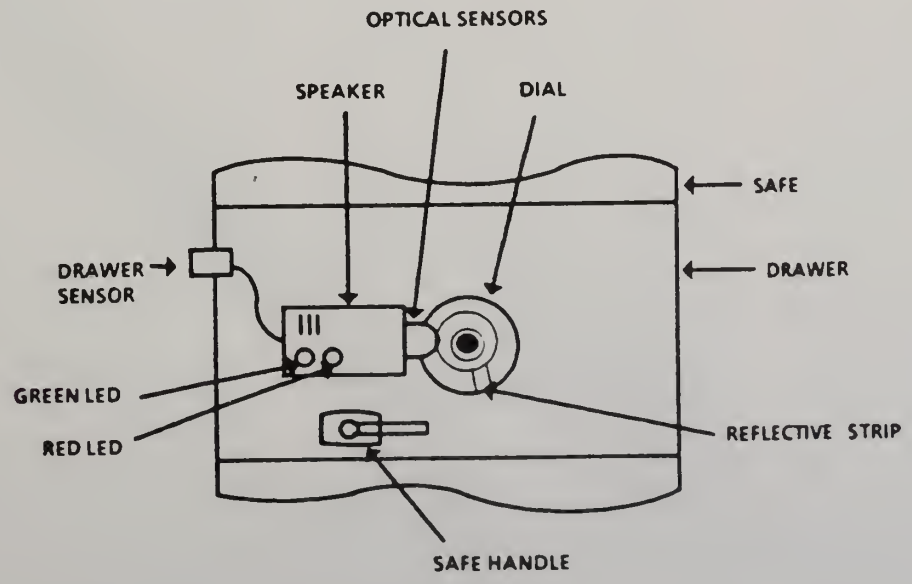

FIGURE 1
DIAGRAM OF SAFE ATTACHMENT

When the safe is opened, the device indicates power up by sounding a tone and lighting a red LED. It does this periodically the entire time the safe is open to inform the user that the safe is not secure. When the safe is closed, the dial must be rotated at least four times in the same direction to be fully secured. A reflective piece of tape is attached to the dial so that the device can sense the dial rotation. The device then counts the rotations of the dial to ensure at least four complete rotations. When four rotations have been sensed, it sounds a secure tone, lights the green LED, and shuts itself off. If the user does not rotate the dial after closing the safe, or fails to rotate the dial four times in the same direction, the device lights the red LED and sounds an alarm tone.

This device offers many advantages as an attachment to a safe or as a built-in device. With minor software changes or additions, the device could be attached to a standard serial or parallel port to lend itself to attaching into a network of safes that are attached to a PC to monitor all safes in a building. It could also be attached to some type of keypad so that the user(s) of the safe could enter an identification number, and the device could then keep track of safe accesses.

FOR ADDITIONAL INFORMATION: Naval Surface Warfare Center, Robert D. Heidenreich, Silver Spring, MD 20903-5000; (202)394-4332. Code D21.

U.S. Navy Fact Sheet

Method of Determining the Orientation of a Moving Platform

NAVSTAR Global Positioning System (GPS) satellites are currently being placed in orbit to form a constellation which will enable a user to determine the position of a reciever's antenna anywhere over the Earth during all weather conditions. An extended application of the GPS now has commercial potential.

This application extends the GPS to determine a vehicle's orientation in addition to standard position. Here, an antenna is moved in plane. This movement could be on a plate or a windshield wiper arm-type movement. Since GPS antennas can be small, the mechanical motion can easily be accomplished. The mechanical motion must be aligned to the vehicle and synchronized to the GPS measurements. Orientation, for example a ship's heading, can then be determined based on differences in antenna position.

FOR ADDITIONAL INFORMATION: For information on licensing of this subject, contact the Naval Surface Warfare Center, Mr. Ramsey D. Johnson, Code D211, Naval Surface Weapons Center, Silver Spring, MD 20903; (202)394-4332.

To discuss this effort further, contact: Dr. Alan G. Evans, Code K13, (703)663-8405, Naval Surface Warfare Center, Dahlgren, VA 22448-5000.

NASA Tech Brief
National Aeronautics and
Space Administration
NASA's Jet Propulsion Laboratory, Pasadena, California

Applying Thermal Gradients to Control Vibrations

Thermal actuators might be used to stabilize large structures.

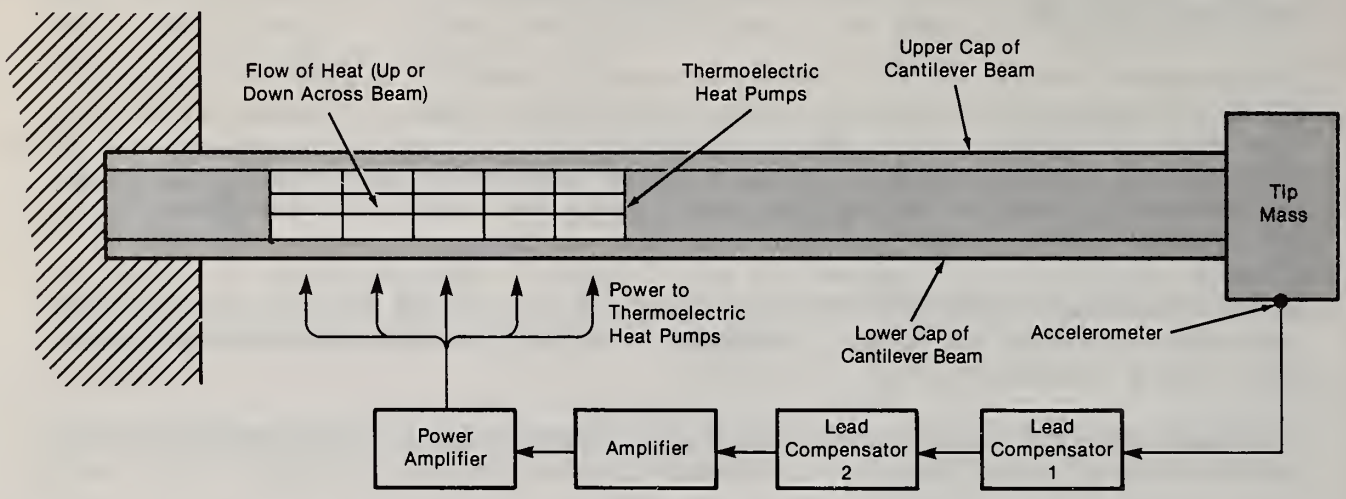

Responding to a Processed Signal From the Accelerometer, thermoelectric heat pumps apply thermal gradients that produce expansions and contractions in the upper and lower caps of the cantilever beam. These expansions and contractions partly counteract the vibrations sensed by the accelerometer, thus contributing to damping.

Thermal gradients can be applied to a structure in a controlled way to help damp low-frequency vibrations, according to preliminary theoretical and experimental studies. Like mechanical actuators in prior experimental structural-vibration-damping systems, thermal actuators could be incorporated into structures as parts of feedback control systems that would automatically help to stabilize the structures. In some cases, active stabilization by differential heating might be preferable to passive stabilization by damping or to active stabilization with suitably timed mechanical pulses.

The principle of dynamic stabilization via thermal gradients can be introduced via the example of a thermal damping phenomenon of a beam in bending vibration. As the beam deforms, the material on one side of the neutral axis is compressed and, therefore, heated slightly; the material on the other side of the neutral axis is subjected to tension and, therefore, cooled slightly. Thus, there arises a thermal gradient, which causes heat to flow from the compressed side to the tensed side. This flow of heat, which represents the conversion of mechanical to thermal energy, contributes to damping.

The new damping concept calls for the application of suitably timed and shaped thermal-gradient waveforms to generate expansions and contractions that counteract vibrations. In the system studied, the vibrating structure was a sandwich cantilever beam loaded with a mass at the end. Thermal gradients between the bottom and the top of the beam were generated by Peltier-effect thermoelectric heat pumps (see figure).

The vibrations of the beam were sensed by an accelerometer. The output of the accelerometer was fed through two lead compensators and two amplifiers, then applied to the thermoelectric heat pumps. The lead compensators and amplifiers acted as a control system that generated the proper amplitude and phase to compensate for both the natural vibrational frequency (about 2 Hz) of the loaded beam and the delays inherent in the thermal responses of the thermoelectric heat pumps and the beam. With the control system turned off, the damping ratio in the first vibrational mode was 0.81 percent. When the control system was turned on, the damping ratio increased to 7.4 percent.

This work was done by Donald L. Edberg of Caltech for **NASA's Jet Propulsion Laboratory.**
NPO-17067/TN

FOR ADDITIONAL INFORMATION: *Contact: Director, Technology Transfer Division, P.O. Box 8757, BWI Airport, MD 21240; (301) 621-0100 Ext. 241*
REFER TO THE NUMBER LISTED AT THE END OF THIS ARTICLE

NASA Tech Brief
National Aeronautics and
Space Administration
Marshall Space Flight Center, Alabama

Capillary-Pumped Heat-Transfer Loop

A new system offers advantages of a heat pipe without its limitations.

A new type of capillary-pumped heat-transfer loop primes itself at startup; it needs no external pumps for priming the working fluid. The new loop can remove substantial quantities of heat like that generated by people and equipment in rooms and vehicles. A demonstration unit removes heat loads as high as 2 kW. It appears feasible to enlarge the system to handle as much as 50 kW.

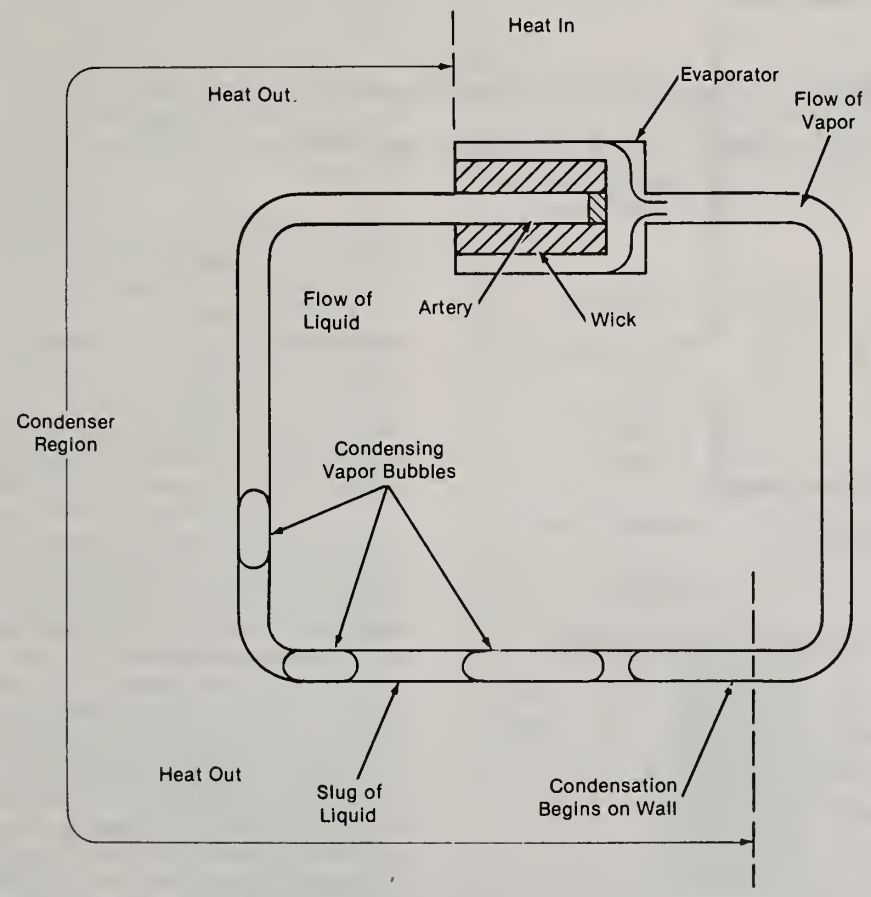

Figure 1. A **Capillary-Pumped Loop** creates a continuous path for its working fluid (water); both vapor and liquid move in the same direction. A key element in the operation of the loop is the formation of slugs of liquid, condensed from vapor and moved along the loop by vapor bubbles before and after it.

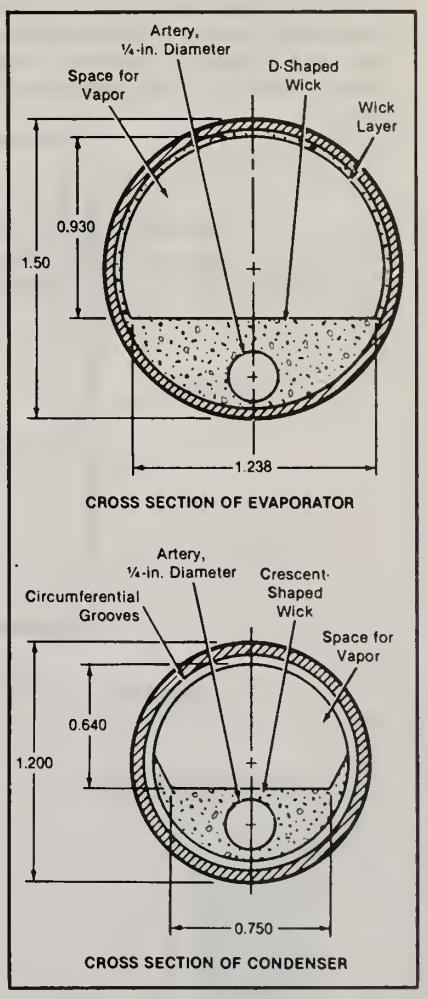

Figure 2. **Both the Evaporator and the Condenser** contain axial arteries that carry water. Heat entering the evaporator from the heat source provides the energy for the transport of fluid and heat. Dimensions are in inches.

Unlike in a heat pipe, the liquid and vapor in a capillary loop do not flow in opposite directions in the same section of pipe but instead flow in the same direction around the loop. Furthermore, the wick occupies only the evaporator and condenser sections and not the full length of the tube as in a heat pipe (see Figure 1). The working fluid evaporates from the surface of the wick, which is heated by the load. In the new loop, the working fluid is water, and the wick and tubing are made of titanium.

The water vapor moves along the loop to a region of lower temperature, where it begins to condense. At first, the condensate forms a ring around the inside of the pipe and is dragged along the pipe by the flowing vapor. Eventually the mass of the condensate grows large enough so that surface tension forces the condensate to bridge the diameter of the pipe, forming a slug of liquid.

The slug behaves like a piston in a cylinder. The pressure of the vapor behind the slug pushes it along, and the partial vacuum of the condensing vapor before the slug pulls it along. Liquid pistons make it possible for capillary-pumped loops to carry large quantities of heat over long distances. The heat-transport distance is 1 m in the demonstration unit and is expected to be 10 m in a scaled-up unit.

A conventional capillary-pumped loop requires an external pump to feed working fluid to the evaporator when heat exchange is started. The new evaporator, however, is designed so that water never boils away from

it completely. It always retains enough liquid water to start the heat-exchange cycle. It is fully passive, deriving its power from the heat load. It is also highly reliable because pumps and valves are eliminated.

The evaporator in the new unit consists of a thin-walled titanium tube, lined with a sintered powdered titanium wick at the top of its cross section and with a D-shaped block wick of the same material at its bottom (see Figure 2). Extending axially through the block wick is an artery for liquid water.

The condenser is a titanium tube with circumferential grooves to aid the transfer of heat from the vapor. A crescent-shaped block wick — also of sintered titanium — collects the condensate. An artery in the wick carries the condensed water to the tube that leads to the evaporator.

This work was done by Thermacore, Inc., for **Marshall Space Flight Center.** *MFS-27196/TN*

FOR ADDITIONAL INFORMATION: *Contact: Director, Technology Transfer Division, P.O. Box 8757, BWI Airport, MD 21240; (301) 621-0100 Ext. 241*

REFER TO THE NUMBER LISTED AT THE END OF THIS ARTICLE

NASA Tech Brief
National Aeronautics and Space Administration
Goddard Space Flight Center, Greenbelt, Maryland

Licensing Opportunity

Cryogenic Shutter Mechanism

A device minimizes heating by external and internal sources.

An electromagnetic shutter mechanism operates at ambient and cryogenic temperatures to shield an optical element, such as a mirror, filter, polarizer, beam splitter, or detector, from external light and radiation in a cryogenic Dewar that is equipped with a window for optical evaluation. The shutter can be rapidly opened and closed during the evaluation process, thus minimizing or eliminating thermal gradients in the optical element so that it can be tested accurately.

Unlike a purely mechanical shutter, the electromagnetic shutter can be installed without piercing the vacuum shell and thermal shrouds of the Dewar to install a linkage. Instead, the shutter utilizes existing electrical connections through the bottom of the Dewar and, therefore, minimizes vacuum leaks and cryogenic fluid losses. In addition, the shutter draws current only briefly, when it opens or closes, thus generating minimal internal heat.

The shutter consists of a circular copper paddle attached to a coil and magnet housing (see Figure 1). With the housing mounted directly on a cold plate in the Dewar housing and the paddle connected to the plate by a braided-copper thermal strap, the paddle is at nearly the same temperature as that of the optical element. When the mechanism torques the paddle to the open position, the optical element is exposed to radiation entering through the window. When the mechanism torques the paddle to the closed position, the radiation path to the test item is completely blocked.

The paddle is bolted to a shaft that extends through the housing (see Figure 2). Nylon bearings support the shaft. The bearings are split to accommodate thermally induced contractions when the assembly cools. The shaft supports a permanent magnet encircled by a coil mounted in the housing.

The force of gravity keeps the paddle in the closed position, resting on a mechanical stop. When current is passed through the coil, it creates a magnetic field that turns the magnet, shaft, and paddle almost 90° until the paddle strikes another mechanical stop. The paddle is then in the open position. At cryogenic temperatures, a current of 0.3 A at 8 V is required to produce movement.

When the shutter mechanism is at cryogenic temperature, it has enough mechanical resistance to stay in the open position with the current turned off, thereby generating no additional heat. When a reverse current is passed through the coil, the mechanism returns to the closed position.

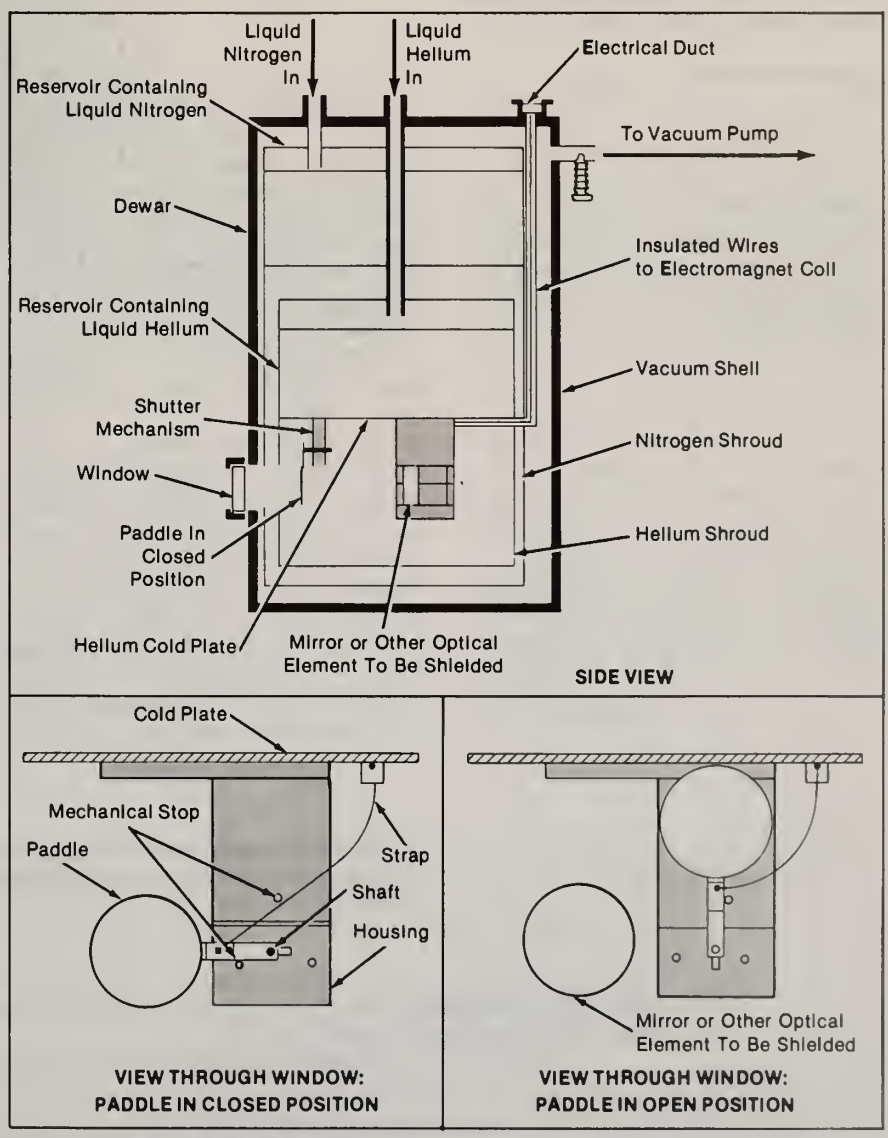

Figure 1. The **Shutter Mechanism** in the Dewar container alternately shields and exposes an optical element as a paddle is rotated between mechanical stops. The mechanism is mounted on the cold plate of the liquid-helium reservoir.

This work was done by Richard D. Barney and Thomas J. Magner of **Goddard Space Flight Center.**

This invention is owned by NASA, and a patent application has been filed. Inquiries concerning nonexclusive or exclusive license for its commercial development should be addressed to the Patent Counsel, Goddard Space Flight Center. Refer to GSC-13189/TN.

Goddard Space Flight Center
Technology Utilization Officer: Donald S. Friedman
Mail Code 702.1
Greenbelt, MD 20771
(301) 286-6242
Patent Counsel:
R. Dennis Marchant
Mail Code 204
Greenbelt, MD 20771
(301) 286-7351

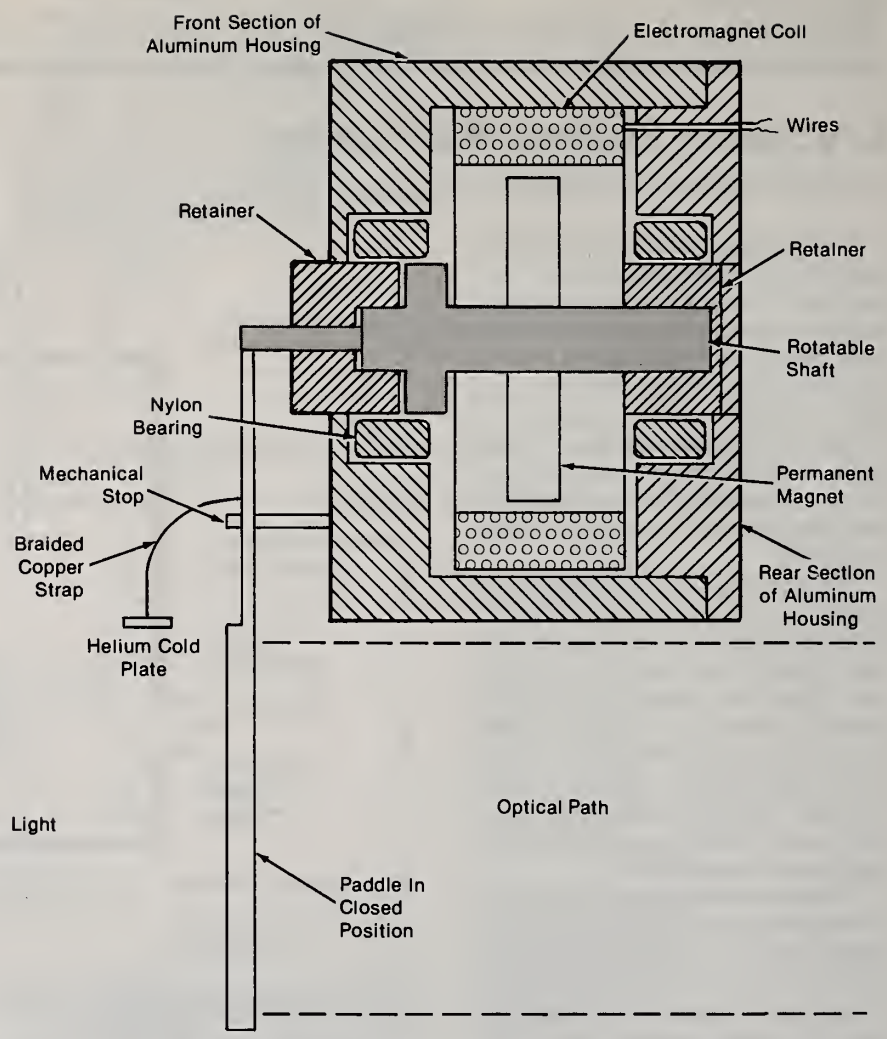

Figure 2. The **Paddle, Shaft, and Magnet** constitute an assembly that is rotated by the electromagnetic field of the coil. In this cross section, the paddle is shown in closed position, where it blocks light.

FOR ADDITIONAL INFORMATION: *Contact: Director, Technology Transfer Division, P.O. Box 8757, BWI Airport, MD 21240; (301) 621-0100 Ext. 241*

REFER TO THE NUMBER LISTED AT THE END OF THIS ARTICLE

NASA Tech Brief
National Aeronautics and
Space Administration

Effects of Turbulence on Ignition

The enhancement of evaporation by turbulence could be used to enhance ignition.

A report presents a theoretical study of the effects of turbulence on the ignition of drops of a single-component liquid fuel. This report is closely related to the one described in the preceding article, "Turbulence and Evaporation in Clusters of Drops" (NPO-17323). Although the use of turbulence to control ignition is well known to designers and experimenters, it has not previously been studied theoretically in the dense-spray regime.

The study uses a theoretical model for evaporation like the one of the preceding article and a model for ignition developed previously. The radial velocity, v_a, of gas at the surface of a sphere of influence is taken as an algebraic combination of the rate of evaporation and the speed, *da/dt*, with which the radius changes. The weighting factors of the algebraic combination are such that in a dilute spray, all new vapor coming from the drops is trapped in the cluster, whereas in a dense spray where evaporation is strong, maximum new vapor escapes to the ambient.

The rate of loss of mass from the cluster is taken as an algebraic combination of v_a and *da/dt*. It is assumed that mass, molecular species, and enthalpy are all transferred at rates proportional to that of the loss of mass. The transfers of heat, molecular species, and mass from the surroundings to the cluster are assumed to be of a turbulent nature and proportional to each other.

The fluxes of heat, mass, and molecular species into the cluster are assumed to be given by a correction to the solution for diffusion between the far field and the surface of the cluster, as in the report described in the preceding article. Thus, the convective correction contains the transfer due to turbulence. The two models of turbulence described in the preceding article — gradually increasing from zero and initially present at a high level — are used here to investigate the effects on evaporation and/or ignition.

Calculations were performed for a cluster of n-decane drops where the initial velocity of the gas is zero. The results show that turbulence promotes the evaporation necessary for ignition when the cluster is large, the temperature of the drops is low, or there is initially no fuel vapor in the gas phase. The mechanism of enhancement is increased transport between the surrounding gas and the cluster. However, the crucial control parameter is the initial ambient temperature of the gas phase because heat must be transported from the gas back to the cluster to support ignition.

This work was done by Josette Bellan and Kenneth G. Harstad of Caltech for **NASA's Jet Propulsion Laboratory.** *"Ignition Enhancement for Dense Clusters of Drops Using Turbulence Effects."*
NPO-17335/TN

FOR ADDITIONAL INFORMATION: *Contact: Director, Technology Transfer Division, P.O. Box 8757, BWI Airport, MD 21240; (301) 621-0100 Ext. 241*
REFER TO THE NUMBER LISTED AT THE END OF THIS ARTICLE

NASA Tech Brief
National Aeronautics and
Space Administration
Marshall Space Flight Center, Alabama

Glove Box for Hazardous Liquids

A conceptual box is designed for safe handling and cleaning.

A proposed glove box (see figure) would enable a technician to handle hazardous liquids safely and to clean up quickly if a spill should occur. As in any glove box, the technician places hands and arms in gloves at a port to manipulate materials within the box.

Liquids in the box are contained in pouches (this feature is necessary if the box is to be used in zero gravity). To transfer liquid from one pouch to another, the technician inserts a syringe through a septum in a pouch, draws a precise volume of liquid into the syringe, inserts the syringe in the septum of another pouch, and expels the liquid.

To transfer the contents of a pouch to a waste-collection system, the technician inserts the quick-disconnect fitting at the end of a tube on the pouch into a quick-connect fitting on the wall of the box. The entire box can be vented to a vacuum to clean up a spill. When this is necessary, the operator makes use of a chamber in the glove port to prevent the gloves from rupturing under the vacuum and leaking outside air into the box. The operator simply closes a hatch inside the box to seal the glove port and withdraws hands and arms from the gloves, leaving the gloves in the glove chamber. The interior of the glove box can then be opened to the vacuum.

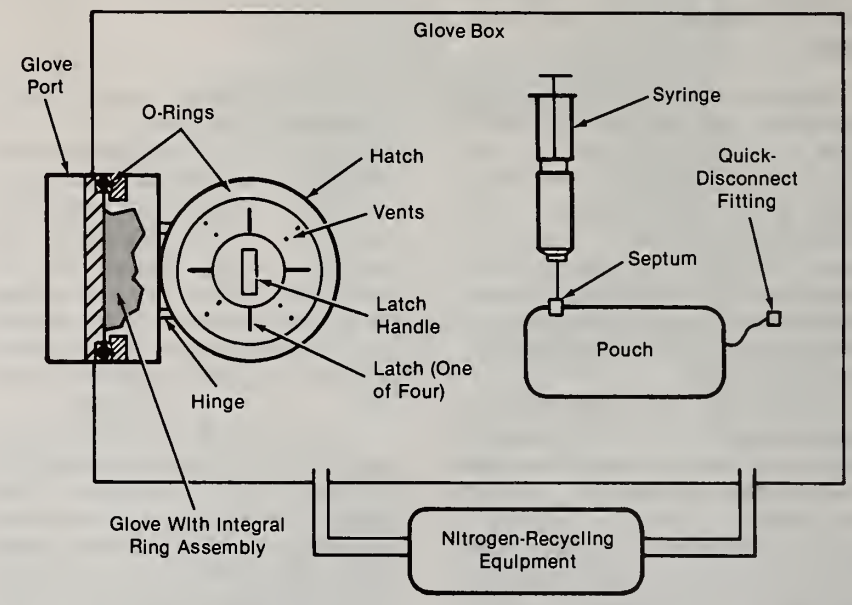

The **Glove Box** includes a hatch that seals off the glove ports so that the box can be vented and purged when necessary.

The gloves can be changed, if necessary, while the hatch is closed. The gloves are part of an integral ring-and-glove assembly. The ring seals to an O-ring in the glove port. A self-sealing plastic bag, attached to the outside of the glove port, is used to replace the gloves.

This work was done by R.N. Rossier and B. Bicknell of Martin Marietta Corp. for **Marshall Space Flight Center**. *MFS-28392/TN*

FOR ADDITIONAL INFORMATION: *Contact: Director, Technology Transfer Division, P.O. Box 8757, BWI Airport, MD 21240; (301) 621-0100 Ext. 241*
REFER TO THE NUMBER LISTED AT THE END OF THIS ARTICLE

NASA Tech Brief
National Aeronautics and Space Administration
NASA's Jet Propulsion Laboratory, Pasadena, California

Licensing Opportunity

Honeycomb-Fin Heat Sink

This strong, lightweight part increases the effectiveness of forced-air cooling.

An improved finned heat sink for electronic components is more lightweight, inexpensive, and efficient than conventional extruded-fin heat sinks. Designed for use with forced air, the heat sink can be easily scaled up to dissipate power up to a few hundred watts.

Although extrusion is an economical fabrication process, it yields fins that are thicker and more widely spaced than they should be for optimum transfer of heat. Extruded fins are about 10 times as heavy as optimized fins need be. An alternative to forced-air cooling with finned heat sinks is cooling by liquids flowing through internal channels in heat sinks. However, in comparison with forced-air systems, liquid cooling systems are more complicated, more expensive, and less reliable, and they need more maintenance.

In the new heat sink, the fins are the internal walls of an aluminum honeycomb structure (see figure). The honeycomb is made by an inexpensive process: sheets of aluminum are painted with stripes of adhesive, bonded together, and then expanded into hexagonal cells in the nonbonded sections. The process is a standard one that has been adapted to heat sinks by use of wider adhesive stripes, sheets that are thicker in proportion to the height of the cells, and a low ratio of width to height period of the cells (about 5 percent).

Instead of expanding bonded flat sheets of aluminum, the fins can be made by bonding corrugated sheets. Air flows easily through the channels created by the peaks and valleys of the corrugations, and, because of the large number of bonding points, the structure is strong.

Air flowing through the cells removes heat from the aluminum. The cells can be readily fabricated with dimensions in the optimum range for heat transfer: a sheet (or fin) thickness of 0.003 to 0.008 inch (0.076 to 0.203 millimeter) and a cell width (or fin spacing) of 0.020 to 0.050 inch (0.51 to 1.27 millimeters). These dimensions are far below the limits of extrusion.

The honeycomb structure is bonded to a top plate by a metal-filled epoxy or other heat-conductive adhesive, and the heat-generating electronic component is mounted on the top plate. For added rigidity and strength, the honeycomb may be placed in a slotted bottom plate.

A blower draws air through a port in the heat sink. The airflow divides in two after entering the port, passing through cells on both sides of the port. A single blower may be used for many heat sinks. The air flows nearly uniformly to all cells. The heat sink, therefore, cools nearly as effectively at its ends as it does near its center, no matter how many columns of cells are combined.

This work was done by Wally E. Rippel of Caltech for **NASA's Jet Propulsion Laboratory**.

In accordance with Public Law 96-517, the contractor has elected to retain title to this invention. Inquiries concerning rights for its commercial use should be addressed to

Edward Ansell
Director of Patents and Licensing
Mail Stop 301-6
California Institute of Technology
1201 East California Boulevard
Pasadena, CA 91125

Refer to NPO-17198/TN.

Jet Propulsion Lab.
NASA Resident Office
Technology Utilization Officer: Gordon S. Chapman
Mail Stop 180-801
4800 Oak Grove Drive
Pasadena, CA 91109
(818) 354-4849
Patent Counsel: Paul F. McCaul
Mail Code 180-801
4800 Oak Grove Drive
Pasadena, CA 91109
(818) 354-2734
Technology Utilization Mgr. for JPL: Norman L. Chalfin
Mail Stop 156-211
4800 Oak Grove Drive
Pasadena, CA 91109
(818) 354-2240

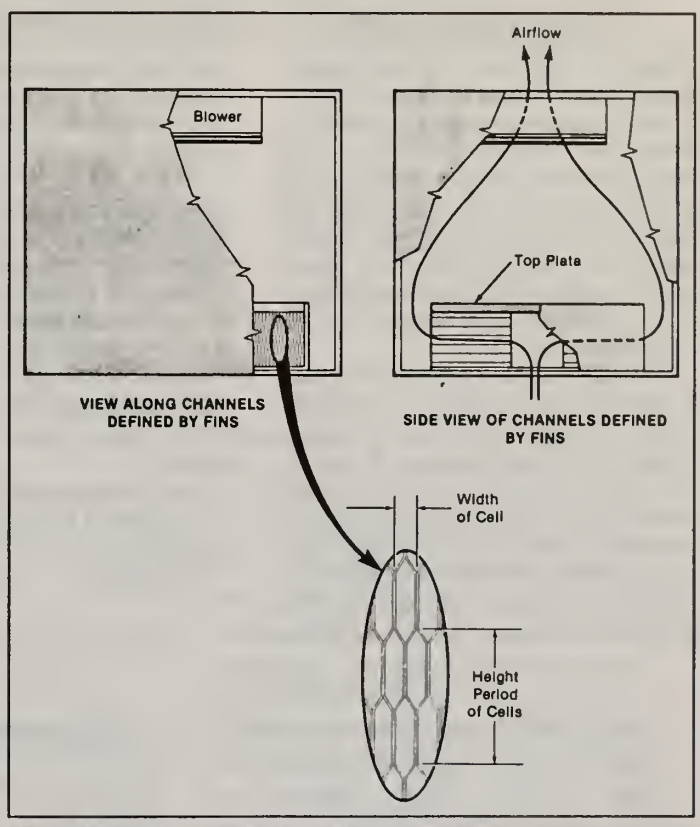

Honeycomb Cells Form Channels that guide air through a heat sink. The cell structure gives strength to the thin aluminum foil of which it is made. The length of the channels can be chosen for thermodynamic efficiency; columns of cells can be combined in any reasonable number because flowing air is distributed to all.

NASA Tech Brief
National Aeronautics and
Space Administration
NASA's Jet Propulsion Laboratory, Pasadena, California

Two-Pipe Heat-Transfer Loop

Liquid and vapor travel in separate tubes.

A device like a heat pipe transports heat over a long distance with negligible loss in temperature, though with considerably smaller total weight. The device uses no pumps or other mechanical means to move the working fluid: Instead it converts part of the available thermal energy to kinetic energy upon vaporization. The vapor carries the thermal energy in the form of latent heat of vaporization. Thus, the device can deliver thermal energy with a drop in temperature of only a fraction of a degree from the source to the sink.

Heat is delivered to an evaporator (see figure). There, the fluid evaporates from the surface of a porous structure. The surface tension of the liquid prevents the vapor from flowing into the porous structure, forcing the vapor down the vapor tube to a condenser. There, the fluid condenses on another porous structure that isolates the vapor from the liquid in the liquid tube. The liquid tube is exposed to thermal losses that cool the return fluid and assure a low vapor pressure in the return leg of the loop. Thus, the driving potential for the circulation of the working fluid is due to the temperature difference across the porous structure in the evaporator.

So that the working fluid will not condense in the insulated vapor tube as it flows from the heat source to the heat sink, the vapor is superheated and/or the vapor tube is traced with an electric heater to make up for any thermal losses from the vapor tube due to the limitations of the insulation. The amount of superheat and/or electric trace-heater power depends on the thermal loss from the vapor tube and the thermal power transfer.

This work was done by Robert Richter of Caltech for **NASA's Jet Propulsion Laboratory.**
NPO-17404/TN

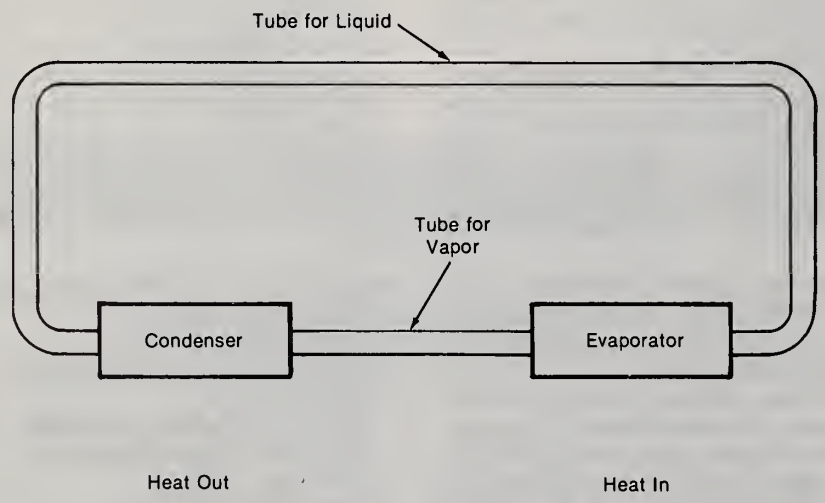

Liquid and Vapor Flow in Separate Pipes in this heat-transfer loop. A laboratory model that contained water as the working fluid was able to transfer 80 W of thermal power from the evaporator to the condenser.

FOR ADDITIONAL INFORMATION: *Contact: Director, Technology Transfer Division, P.O. Box 8757, BWI Airport, MD 21240; (301) 621-0100 Ext. 241*
REFER TO THE NUMBER LISTED AT THE END OF THIS ARTICLE

U.S. Navy Technology Application

MIDAS Program Aids Designer in Creating Fleet Mooring Assemblies on Computervision

The creation of fleet mooring assembly drawings has been streamlined through the use of a program called Mooring Interactive Detailing and Assembly System (MIDAS). MIDAS provides a user-friendly drafting tool for mooring designers who are unfamiliar with the standard Computervision CADDS (Computer-Aided Design and Drafting System) drafting environment. The simple iconic menu interface, MIDAS, supplements the complex command structure on the Computervision CDS 4000 computer.

Mooring Design Tool — MIDAS facilitates a wide variety of tasks related to the production of fleet mooring assembly drawings. These tasks include drawing individual mooring parts, assembling these parts into mooring legs, performing simple design checks, generating a bill of material, creating a three-dimensional model, inserting standard details, and creating the final assembly drawings.

Iconic menus are designed to execute complex design/drafting tasks as shown in the start-up menu, Figure 1. This opening menu quickly gives the user a visual picture of what he can do. Choosing an iconic key that has an arrow in the corner produces a pull-down menu with other choices. Choosing an iconic key with a folded corner gives another page of menus. Choosing any other iconic key will execute a set of CADDS commands in the order necessary for performing the indicated task.

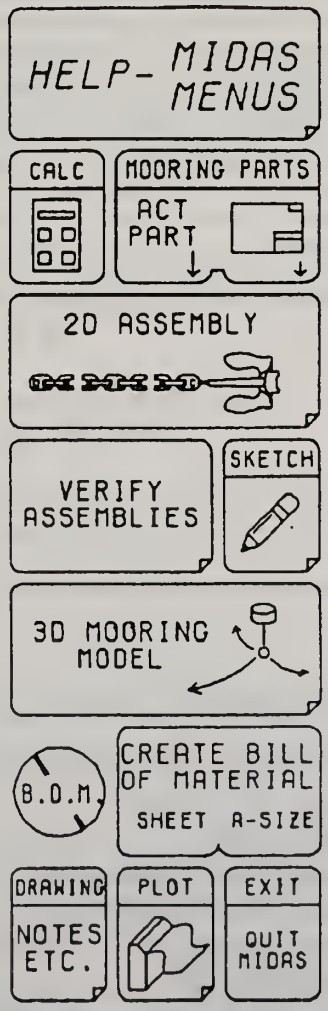

Figure 1. Start-up menu.

The iconic menus are the essential link between the three-dimensional mooring model and the two-dimensional assemblies. An assembly is defined as the linear collection of hardware that connects two hardpoints. Assemblies are built using mooring components from the mooring component library. For instance, a riser assembly would typically be made up of a buoy, a swivel, shots of chain, connecting links, and a ground ring as shown in Figure 2. Within CADDS, an assembly is a collection of two-dimensional extended nodal figures interconnected on a common drawing layer.

MIDAS uses standardized mooring components to minimize drawing time. Each hardware component used to create assemblies is available from the mooring component library via iconic menus such as shown in Figure 3. There are over approximately 800 different sizes and shapes of mooring components in the library. Each figure has two or more connection points that correspond to the point at which they

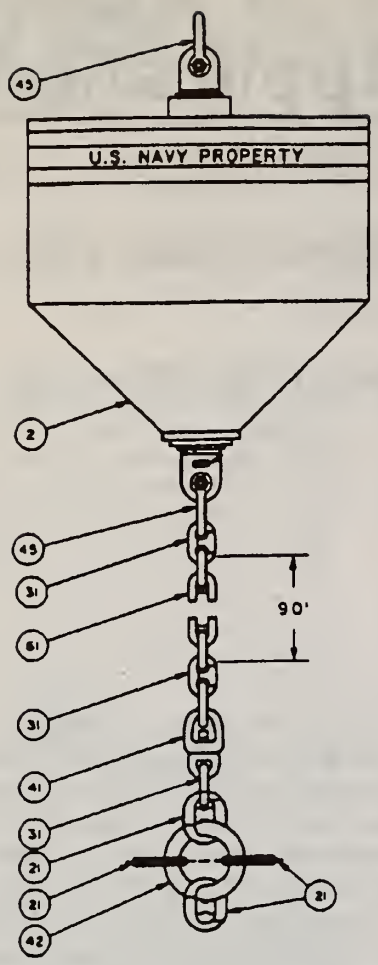

Figure 2
A typical mooring assembly.

contact mating pieces of hardware. In addition to the graphic figure, pertinent attributes, such as size, cost, and weight, are associated with each component.

With the various iconic keys, one can generate a parts list, verify component fit, calculate total weight/length, compute catenary shapes, and identify the weakest link in the mooring system. MIDAS will also build an accurate three-dimensional model for visualization and use by subsequent mooring load analysis programs.

Computer — MIDAS runs concurrently with the standard CADDS graphic system on a Computervision CDS 4000 computer. MIDAS acts only on its iconic commands, while passing on all standard CADDS commands for normal execution.

Reference Manual and Tapes — A reference manual (CR89.003, "Mooring Interactive Detailing and Assembly System (MIDAS)," Rev. 1.2, Dec 1988) and the program on two 9-track tapes are available for a reproduction fee from the Naval Civil Engineering Laboratory.

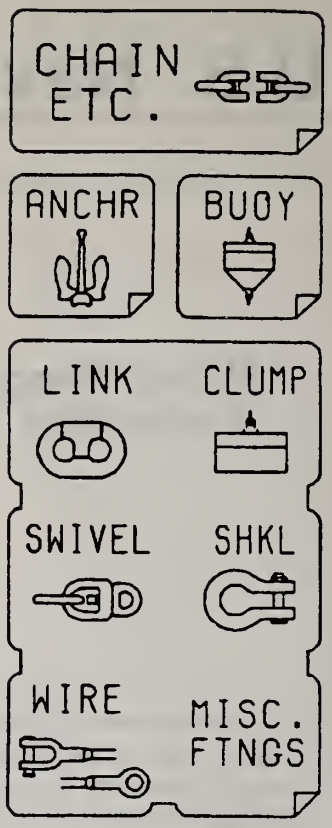

Figure 3
Iconic menu for component library.

NCEL CONTACT

Robert F. Zueck, Code L44, Ocean Structures Division
Autovon 551-1209, Comm (805) 982-1209
or
Jerry Dummer, Code L03C, Facilities Engineering Support Office
Autovon 551-4070, Comm (805) 982-4070

For Additional Information:

To discuss this effort further, contact:

Jerry Dummer
Code L03C
Facilities Engineering Support Office
Naval Civil Engineering Laboratory
Port Hueneme, CA 93043
(805) 982-4070

Refer to Techdata sheet 89-08/TN

Calculating Transonic Flows About Airfoils

Small disturbances and aeroelastic effects can be simulated.

The XTRAN2L computer program is used to calculate two-dimensional transonic flows about airfoils. XTRAN2L uses a time-accurate, alternating-direction, implicit (ADI) finite-difference scheme to solve the two-dimensional complete unsteady transonic small-disturbance equation. Engquist-Osher monotone spatial differencing is used in the ADI solution algorithm to provide a robust and efficient program.

Airfoil-flow-tangency boundary conditions are defined to include the contour of the airfoil, the deformation of the chord, plunge displacement, pitch, and deflection of the trailing edge of the control surface. The wake is represented as a slit downstream of the trailing edge of the airfoil. Nonreflecting far-field boundary conditions are included to minimize reflections of disturbances of the flow field from the computational boundaries.

Three types of unsteady motion can be specified to define the plunge displacement, pitch, and deflection of the trailing edge of the control surface. These types of motion are as follows: (1) forced harmonic, (2) pulse, and (3) aeroelastic transient. The forced harmonic and pulse motions can be used to determine the real and imaginary components of the unsteady aerodynamic forces in the frequency domain.

The forced-harmonic-motion procedure uses analysis of the instantaneous forces calculated over the last cycle of motion to determine the harmonic components of force. The pulse-motion procedure (an alternate to the forced harmonic-motion procedure) calculates aerodynamic transients based upon causing the airfoil to undergo a small prescribed pulse in a specified mode of motion. Fourier analysis can then be applied to the aerodynamic-force-versus-time histories to determine the harmonic components of force.

The aeroelastic-transient capability enables the user to determine the history of motion of the airfoil at a given flow condition. The equations of motion of the structure are coupled with the procedure for solution of the equations of aerodynamic motion, and the two are integrated simultaneously to determine the history of motion.

XTRAN2L was developed on a CDC CYBER mainframe computer running under NOS 2.4. It is written in FORTRAN V and uses overlays to minimize storage requirements. The program requires 120K of memory in overlayed form. XTRAN2L was developed in 1987.

This program was written by David A. Seidel, John T. Batina, and Woodrow Whitlow, Jr., of **Langley Research Center.**
LAR-13899/TN

FOR ADDITIONAL INFORMATION

CONTACT:
COSMIC®
112 Barrow Hall
University of Georgia
Athens, GA 30602
(404) 542-3265

Simulator of Rain in Flowing Air

Drops are injected into slowly flowing air, which is then accelerated.

A report describes a relatively inexpensive apparatus that creates simulated precipitation from drizzle to heavy rain in flowing air. A small, positive-displacement pump and a water-injecting device are positioned at the low-airspeed end of a converging section of wind tunnel 10 in. (25 cm) in diameter. The drops injected by the array are entrained in the flow of air as it accelerates toward the narrower outlet, 15 in. (38.1 cm) downstream. The outlet is 5 in. (13 cm) in diameter.

This scheme makes it possible to furnish drops of fairly uniform size over a range of sizes in an airstream moving at a speed of 213 ft/s (65 m/s). Ordinarily, rains above the intensity of a drizzle are difficult to simulate because the high speed of slippage between the flowing air and the injected drops tends to shatter drops into smaller droplets corresponding to fogs or mists.

Nine injection tubes are fed by a common circular manifold. The water-injecting device is an array of nine hypodermic needles with an inside diameter of 0.009 in. (0.23 mm). The rate of waterflow is varied from 0.4 to 10.2 lb/h (0.05 to 1.2 g/s) to span the range from light to heavy precipitation.

The drops at the narrow (fast-flow) end of the section of wind tunnel are about 300 μm in diameter. This is more than twice the size of drops estimated from prior experimental results and correlations. However, it is smaller than the typical millimeter size of raindrops in heavy precipitation. Apparently, the apparatus produces smaller drops at a higher density than those of natural heavy rain.

This work was done by Richard M. Clayton, Young I. Cho, Parthasarathy Shakkottai, and Lloyd H. Back of Caltech for **NASA's Jet Propulsion Laboratory**. *"Rain Simulation for High-Intensity Acoustic Nose Cavities."*
NPO-17237/TN

FOR ADDITIONAL INFORMATION: *Contact: Director, Technology Transfer Division, P.O. Box 8757, BWI Airport, MD 21240; (301) 621-0100 Ext. 241*
REFER TO THE NUMBER LISTED AT THE END OF THIS ARTICLE

Instrumentation System for Precision Measurements of Flow Vectors

A new instrumentation system developed at ORNL can be used to make precision measurements of the three-dimensional fluid-flow vector in open channels, tunnels, and tubes. This system was designed originally to measure flowing water at 0 to 80°C, but it could be adapted to measure other liquids or gases.. Probes fabricated to date have a Monel tube sheath with nickel capillary-tube Pitots set in a silver solder matrix, but other construction materials could be used if required. In some applications, measurements can be made at static pressures up to several hundred pounds per square inch. The system is composed of three major components: a fixed flow probe, a sensor/electronics module (Fig. 1), and a computer-based data acquisition and analysis system.

The 0.250-in.-diam flow probe has a 40° (half angle) conical tip with seven 0.062-in. Pitot tubes in a close-packed hexagonal array. The probe has a cone of acceptance of ±30° in both pitch and yaw. The seven Pitot tubes extend to a seven-channel sensor/electronics module several feet away. For water speeds of 20 to 60 ft/s, differences in velocity magnitude can be resolved to ±0.1% and angular differences to 0.1°. Accuracy is estimated at 1% for magnitude and

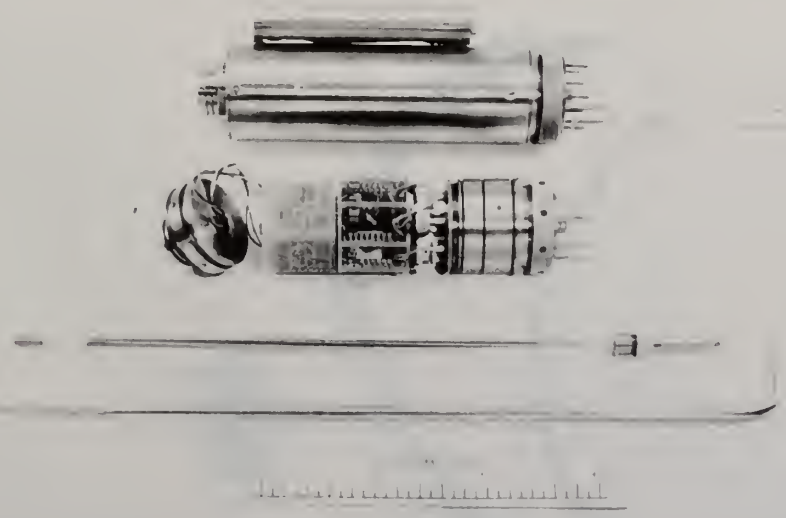

Fig. 1. Components of flow vector instrumentation system. The sensing/electronics module (top) is connected to the fixed probe (bottom), which contains seven Pitot tubes in a hexagonal array.

1° for vector angles.

The sensor/electronics module (1.75 in. diam and 6 in. long) is sealed and filled with oil. It contains seven solid-state pressure transducers, seven constant-current sources and analog signal-conditioning channels, and an eight-channel multiplexer that scans the transducer array and transmits data to the data acquisition and analysis system. The eighth channel of the multiplexer transmits a signal proportional to the temperature of the pressure transducer microchip in a typical measuring channel. The frequency response of the module is restricted by a 100-Hz low-pass filter in each analog channel to avoid signal errors caused by aliasing.

The sensor/electronics module includes a special diaphragm valve for liquid-flow applications. This valve permits the flushing of the fluid-sensing tubes, a process which can be followed by sealing to isolate the individual sensing channels. A sealed bladder inside the module equilibrates the pressure inside the module with the static pressure of the fluid without allowing the fluid to contaminate the electronics. The computer-based data acquisition and analysis system, which was designed to acquire data from 30 probes and is remote from the sensor/electronics module, updates the pressure measurements from each probe at a 2-kHz rate.

The flow-measurement system requires empirical calibration in a tow tank, water tunnel, or wind tunnel to develop a calibration matrix covering the speed, yaw, and pitch ranges of expected use. Calibration coefficients developed from these measurements allow the data acquisition and analysis system to calculate flow vectors from the relationships among the Pitot pressure measurements independently of any static or reference pressure measurement. However, the local pressure inside the sensor/electronics module cannot differ from the total fluid pressure at the Pitot port by more than 25 psi without potential damage to the solid-state pressure transducers.

"A New Instrumentation System for Precision Measurements of Flow Vectors, *I&C Signals*, Development Bulletin No. 7, Oak Ridge National Laboratory (January 12, 1988).

Additional Information:

Office of Technology Applications
Oak Ridge National Laboratory
P.O. Box 2008
Oak Ridge, TN 37831-6257
(815) 574-4192

Fiber Optic Probe for Measuring Downhole Detonation Time and Velocity

Objective

Accurately measure time of detonation and explosive detonation velocity in a blasthole for analysis of explosive performance and delay intervals.

Approach

A blasthole-monitoring fiber optic probe was developed consisting of fiber optic cable to carry the light and a sensor to detect and convert the light signals into electrical signals. Events can then be recorded on an oscilloscope, tape recorder, digital computer, or start-and-stop timer. This method is simpler to use and more immune to electronic noise than existing resistance techniques. The fiber optic materials are inexpensive and easy to obtain, and the recording devices, such as storage oscilloscopes, are available or easy to obtain. The probe provides the mining industry, explosive manufacturers, and those studying blasting, with a practical alternative to complex and expensive coaxial cable reflectometry, resistor strings, or resistance wire methods for determining explosive and detonator performance.

How It Works

The fiber optic cable is a plastic light guide consisting of sixteen 0.01-inch-diameter optic strands having an overall outside diameter of 0.087 inch. The receiver module incorporates a photodiode to detect the signal and an integrated circuit receiver for signal amplification into one package about 1/2 by 5/8 by 7/8 inch.

Fiber optic cables are cut square and to length to get a good light-conducting surface. One end is inserted into the light detector. The other ends of the cables are embedded in the explosive column from the top down to predetermined distances from the ignition point or bottom.

Intense light is given off as the detonation front moves up the explosive column. This light reaches a peak at about the instant the detonation passes the ends of the fiber cables. These pulses of light are carried by the fiber optic cable to the sensor where the light signals are converted to millivolt signals. These millivolt signals are fed into an oscilloscope where their traces of voltage peaks are captured on the screen. The oscilloscope is used to find out how many milliseconds passed from the ignition point to any of the peaks of light or the duration between

Fiber optic cable (0.087-inch outside diameter) and detector for measuring downhole detonation time and velocity.

peaks. The detonation velocity is simply the distance divided by the time interval. The recording system used in the field was a four-channel Nicolet oscilloscope (model 4094A) with the time per point set at 0.5 microsecond.

Test Results

The fiber optic probe was used in two different types of field operations. In the first series of tests, the explosive columns were 40-inch-long plastic tubes filled with 60-pct dynamite. In tubes with an inside diameter of 7/16 inch, the detonation velocities ranged from 8,680 ft/s at the bottom, where the dynamite was densely packed, to 8,060 ft/s near the top of the column, where the dynamite was more loosely packed. In the plastic tubes with an inside diameter of 5/8 inch, the detonation velocities ranged from 9,920 to 11,460 ft/s.

The second field test had explosive columns 17.2 feet long and used 2-inch-diameter sticks of extra dynamite. Holes were punched into the sticks of dynamite at the desired distances from the ignition point, and the fiber optic cables were inserted in these holes. Tape was used to secure the cables to the dynamite. The detonation velocity of the 2-inch columns was 15,140 ft/s.

Patent Status

The United States Department of the Interior is not applying for a patent on this device. At least one commercial fiber optic system for detonation velocity measurement is now available.

For More Information

The use of the fiber optic probe is described in the paper "Fiber Optic Probe to Measure Downhole Detonation Velocities of Explosive Columns," by David L. Schulz, in U.S. Bureau of Mines Information Circular (IC) 9135, "Surface Mine Blasting. Proceedings: Bureau of Mines Technology Transfer Seminar, Chicago, IL, April 15, 1987." For a single free copy of this IC, write to the Bureau's Publication Distribution Section, Box 18070, Cochrans Mill Road, Pittsburgh, PA, 15236-0070.

To learn more about the probe, contact one of the following persons:

Mark S. Stagg, David L. Schulz,
or David E. Siskind
Twin Cities Research Center
U.S. Bureau of Mines
5629 Minnehaha Avenue South
Minneapolis, MN 55417-3099
612-725-4574, 612-725-4594,
or 612-725-4598

NASA Tech Brief
National Aeronautics and
Space Administration
Ames Research Center, Moffett Field, California

Subminiature Hot-Wire Probes

Flows can be measured with higher resolutions.

A class of improved subminiature hot-wire flow-measuring probes has been developed. The sensing portions of the wires in the new probes have a typical diameter of 0.63 μm and lengths of 200 μm, as compared with those of the smallest conventional probes, which have typical diameters of 2 to 5 μm and lengths of 400 to 1,000 μm. The smaller sizes yield improved resolution in measurements of practical aerodynamic flows.

A probe can be made in a one-wire, two-perpendicular-wire, and three-perpendicular-wire version for measurements of one, two, or all three components of flow, respectively. Because it is so small, a probe must be oriented and positioned on a micromanipulator stage and viewed under a microscope during fabrication.

The shank of a probe includes a stainless-steel tube that surrounds an insulating ceramic cylinder, which has two, four, or six longitudinal holes for the electrical connections. Protruding from the holes at the tip of the probe are tapered nickel prongs that support the probe wire(s) (see figure).

Each probe wire is a piece of platinum/rhodium wire plated with silver. The probe wire is cut to length, then fastened to the ends of the tapered nickel prongs with electrically conductive epoxy. The sensing length of the probe wire is defined by electrochemically etching the silver coat from the wire with a small laminar jet of nitric acid that is translated along the desired sensing length. The acid residue is then rinsed from the wire by a small jet of distilled water translated similarly along the wire. After construction, the probe is tested electrically and examined under the microscope to ensure that the length of the etched portion is consistent with the length expected on the basis of the measured electrical resistance.

Prototypes of the subminiature probes have been operated with commercial hot-wire circuitry, but some changes in the electronics and procedures were needed to reduce breakage and optimize frequency response. Calibration methods identical to those employed for conventional probes were found satisfactory for the subminiature probes. Drift was occasionally observed to be about twice that of conven-

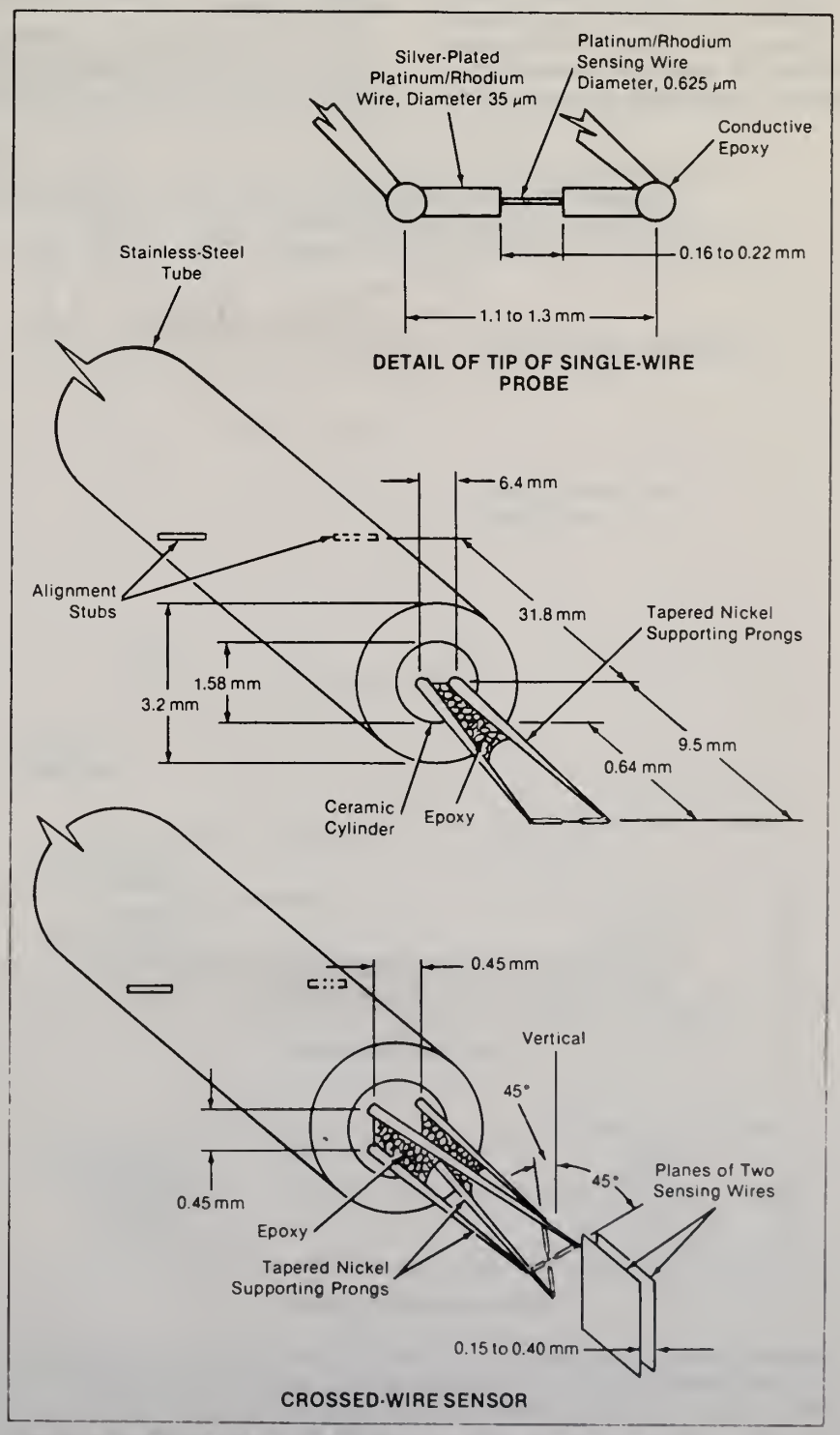

The **Subminiature Probes** can be made in one-wire and two-wire versions with typical configurations and dimensions like those shown here. (A three-wire version can also be constructed.) Note that the sensing wires in the crossed-wire version do not touch each other.

tional probes, resulting in slightly larger uncertainties in measurements of flows.

The subminiature probes were tested by using them to take measurements in a constant-pressure turbulent boundary layer. Measurements of mean statistical quantities, including Reynolds stresses, and spectra were obtained to evaluate the performances of the subminiature sensors compared with those of conventional probes. The results indicate that the new probes can give improved measurements of turbulence quantities near surfaces and that the anisotropies of flows strongly influence the relative errors caused by phenomena related to spatial resolution. Therefore, classical theories based on the assumption of isotropic turbulence cannot be expected to provide accurate estimates of spatial-resolution effects in cross-wire probes near walls.

This work was done by R. V. Westphal and F. R. Lemos of **Ames Research Center** *and P. M. Ligrani of the Naval Postgraduate School. Further information may be found in NASA TM-100052 [N88-22336], Price Code: A03 "Development of Subminiature Multi-Sensor Hot-Wire Probes."*

Copies may be purchased from the National Technical Information Service, Springfield, Virginia 22161, Telephone No. (703) 487-4650. Rush orders may be placed for an extra fee by calling (800) 336-4700.

ARC-12228/TN

FOR ADDITIONAL INFORMATION: *Contact: Director, Technology Transfer Division, P.O. Box 8757, BWI Airport, MD 21240; (301) 621-0100 Ext. 241*

REFER TO THE NUMBER LISTED AT THE END OF THIS ARTICLE

NASA Tech Brief
National Aeronautics and
Space Administration
Marshall Space Flight Center, Alabama

High-Temperature Strain-and-Temperature Gauge

A two-element gauge is used alternately in two different bridge circuits to measure both temperature and strain.

A three-lead strain-and-temperature gauge of a type that has fallen into disuse in recent years has been developed for use at temperatures up to 750 °F (390 °C) on a fiber-reinforced carbon/carbon composite material that has a coefficient of thermal expansion of 0.8 ppm/°F (1.4 ppm/°C). Unlike most temperature-compensated gauges, the outputs of which show hysteresis, this gauge gives accurate results even during rapid heating and cooling cycles. Similar gauges of this type can be produced for materials with different coefficients of thermal expansion.

The total strain in a material includes mechanical strain due to stress plus apparent strain due to thermal expansion. To measure mechanical strain, it is necessary to compensate for the purely thermal component in the output of a strain gauge. This gauge comprises two wire sensing grids, the temperature coefficients of electrical resistance of which have opposite signs (see figure). The wires of the two grids are selected to have temperature coefficients of the proper magnitudes to provide changes of resistance with temperature that are equal in magnitude but opposite in sign when the gauge is bonded to the carbon/carbon or other substrate material. To measure strain, the two elements are connected in series and connected as one arm of a Wheatstone bridge, so that the strain components of the outputs of the two grids are added in the overall output signal while the components due to temperature cancel each other in the overall output. To measure temperature, the gauge is used as a three-terminal device forming half of a Wheatstone bridge: In this configuration, the temperature components are added together while the strain components cancel each other.

The elements of the gauge are made of Hitec K- (or equivalent) alloy wire. Annealed K-alloy wire, which has a high positive temperature coefficient of electrical resistance, is used for one element. K-alloy wire can be treated to produce a negative temperature coefficient of the desired magnitude for the other element. In this case, the negative element is treated so

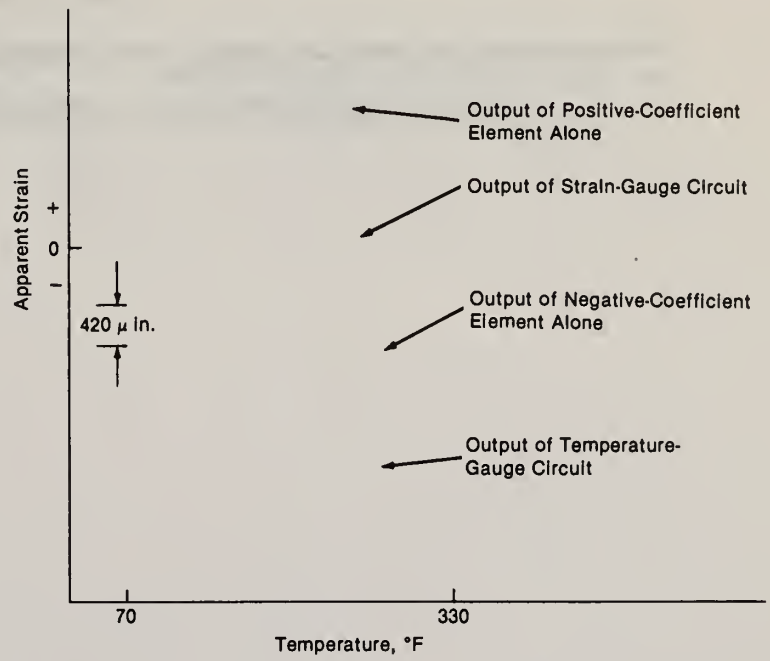

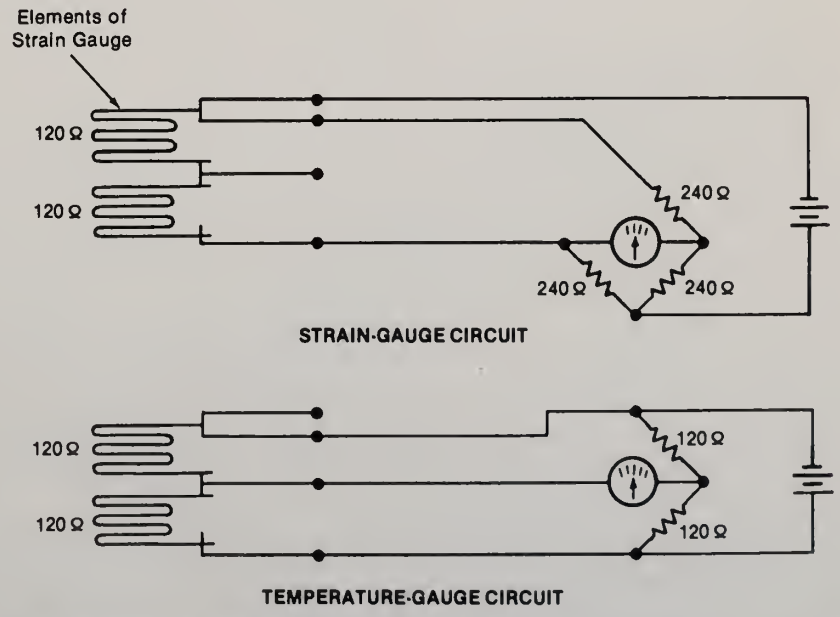

The **High-Temperature Strain-and-Temperature Gauge** is connected to different bridge circuits to measure strain and temperature. The graph shows the apparent-strain outputs of the individual elements, the net (temperature-compensated) strain output with the two elements in series, and the temperature signal.

that it would be temperature-compensated if used along with a material that has a coefficient of thermal expansion of 6 ppm/°F (10.8 ppm/°C). This combination of alloys turns out to be closely temperature-compensated for use with the composite material of interest.

To minimize the component of output due to applied strain when the gauge is used to measure temperature, the sensitivities of the two elements to strain must be closely matched. The sensitivities were measured with the two elements cemented side-by-side on a cantilevered steel test bar loaded at the free end to produce strain and were found to differ by less than 1 percent.

This work was done by S.P. Wnuk of Hitec Products, Inc., and S.J. Lanius of Morton Thiokol, Inc., for **Marshall Space Flight Center.**

Inquiries concerning rights for the commercial use of this invention should be addressed to the Patent Counsel, Marshall Space Flight Center. Refer to MFS-28320/TN.

FOR ADDITIONAL INFORMATION: *Contact: Director, Technology Transfer Division, P.O. Box 8757, BWI Airport, MD 21240; (301) 621-0100 Ext. 241*

REFER TO THE NUMBER LISTED AT THE END OF THIS ARTICLE

Environmental Science & Technology

0262 Soil Sampling Quality Assurance User's Guide-Second Edition

Other Items of Interest

0302 Evaluation of HCl Continuous Emission Monitors

0298 MIPROPS Program Now Available Online, Worldwide

United States
Environmental Protection
Agency

Environmental Monitoring
Systems Laboratory
Las Vegas NV 89193-3478

Research and Development

EPA

Project Summary

Soil Sampling Quality Assurance User's Guide-Second Edition

An adequate quality assurance/quality control (QA/QC) program requires the identification and quantification of all sources of error associated with each step of a monitoring program so that the resulting data will be known quality. The components of error, or variance, include those associated with sampling, sample preparation, extraction, analysis, and residual error. In the past, major emphasis often has been placed on QA/QC aspects of sample analysis and closely associated operations such as sample preparation and extraction. For monitoring a relatively inhomogeneous medium such as soil, the sampling component of variance will usually significantly exceed the analysis component. Thus, in this case a minimum adequate QA/QC plan must include a section dealing with soil sampling. The purpose of this document is to provide guidance in QA/QC aspects related to soil sampling.

Generally soil monitoring is undertaken to carry out the provisions and intent of applicable environmental laws with high priority requirements associated with hazardous waste management. The objectives of soil monitoring programs are often to obtain data on the basis of which to answer one or more of the following questions.

- Are the concentrations of specified soil pollutants in a defined study region significantly different from the concentrations in a control region?
- Do the concentrations of specified soil pollutants in a defined region exceed established threshold action levels?
- At the measured concentrations of specified soil pollutants in a defined study region, what is the associated risk of adverse effects to public health, welfare, or the environment?

For each of these applications, the QA/QC methods and procedures cannot be specified without giving careful consideration to the consequences of making an error, for example, in a decision to require or not to require cleanup of a contaminated region. It follows in general that to be maximally cost-effective and defensible the QA/QC objectives of a soil monitoring program cannot be separated from the objectives of the soil monitoring program itself.

In general, the progression of events leading to the development of an adequate Quality Assurance Program Plan (QAPP) follows the outline shown below:

1. State study objectives
2. Evaluate impacts of mistakes.
3. Define data quality objectives (DQOs).
4. Design study to achieve DQOs.
5. Design QAPP to confirm achievement of DQOs.

Often it will not be possible to specify in advance what DQOs are possible to achieve. In such cases DQO goals should be set, a QAPP prepared, and a pilot study conducted to determine the achievability of the goals.

Present U.S. EPA guidance for development of DQOs requires that specifications for the following factors must be addressed:

- precision,
- accuracy,
- completeness,
- representativeness, and
- comparability.

A sixth factor of importance to all of the above is the detection limit of the measurement method used. Other important factors which should be considered in specifying DQOs include:

- acceptable probability of a Type I error (judging a clean area to be dirty);
- acceptable probability of a Type II error (judging a dirty area to be clean); and
- desired minimum detectable relative difference between two different geographical areas.

The development of DQOs involves an iterative interaction between management and technical staff. Management identifies the needs and resources available. The technical staff develops guidance for assisting management in making the decisions required to develop the DQOs. The DQO process usually involves a

three-stage process as outlined below.

1. Identify decision types.
2. Identify data uses/needs.
3. Design data collection program.

The end result is site-specific guidance for evaluating and interpreting sampling data.

Frequency of sampling is an important aspect of the more definitive study which usually cannot be addressed in the exploratory study because of the relatively short time span over which the exploratory study is conducted. The required frequency of sampling depends on the objectives of the study, the sources of pollution, the pollutants of interest, transport rates, and disappearance rates (physical, chemical, or biological transformations as well as dilution or dispersion). Sampling frequency may be related to changes over time, season, or precipitation. An approach that has been used successfully has been to provide intensive sampling early in the life of the study (e.g., monthly for the first year) and then to decrease the frequency as the levels begin to drop. The important principle is that the sampling should be conducted often enough that changes in the concentrations of soil pollutants important to the achievement of the monitoring objectives are not missed.

The important questions to be answered in the analyses and interpretation of QA/QC data are: "What is the quality of the data?" and "Could the same objective have been achieved through an improved QA/QC design which may have required fewer resources?" It is desirable to provide summarized tables of validated QA/QC data in the final report. This approach allows users to verify the reported results as well as begin to build a body of QA/QC experimental data in the literature which allow comparisons to be made among studies. Special emphasis should be placed on how overall levels of precision and confidence were derived from the data. If portions of the study results are ambiguous and supportable conclusions cannot be drawn with regard to the reliability of the data, that situation must be clearly stated.

There is insufficient knowledge dealing with soil monitoring studies to state with confidence which portions of the QA/QC plan will be generally applicable to all soil monitoring studies and which must vary depending on site-specific factors. As experience is gained, it may be possible to provide more adequate guidance on this subject. In the meantime, it is recommended that many important factors of QA/QC plans be considered as site-specific until proven otherwise.

Another important aspect of QA/QC is auditing. The purpose of an audit is to insure that all aspects of the QA/QC system planned for the project are in place and functioning well. This include all aspects of field, sample bank, and laboratory operations. Whenever a problem is identified, corrective action should be initiated and pursued until corrected. Sample chain-of-custody procedures and raw data are checked as appropriate, and results of blind QA/QC samples routinely inserted into the sample load are reviewed. Spot checks of sampling methods and techniques, sampling and analysis calculations, and data transcription are performed. Checks are made to ascertain that required documentation has been maintained and in an orderly fashion, that each of the recorded items is properly categorized, and cross-checking can be easily accomplished. Checks are made to insure that the data recording conforms to strict document control protocols and the program's QA/QC plan.

It is recommended that an audit of the overall QA/QC plan for sample documentation, collection, preparation, storage, and transfer procedures be performed just before sampling starts. This is to review critically the entire sampling operation to determine the need for any corrective action early in the program.

The project leader of a soil monitoring project is responsible for ascertaining that all members of his project team have adequate training and experience to carry out satisfactorily their assigned missions and functions. This is normally accomplished through a combination of required classroom training, briefings on the specific monitoring project about to be implemented, and field training exercises. Special training programs should be completed by all personnel prior to their involvement in conducting audits.

Delbert S. Barth, Benjamin J. Mason, and Thomas H. Starks, are with the University of Nevada, Las Vegas, NV 89154; the EPA author Kenneth W. Brown (also the EPA Project Officer, see below) is with the Environmental Monitoring Systems Laboratory, Las Vegas, NV 89193-3478.

The complete report, entitled "Soil Sampling Quality Assurance User's Guide—Second Edition," (Order No. PB 89-189 864 AS; Cost: $28.95, subject to change) will be available only from:

National Technical Information Service
5285 Port Royal Road
Springfield, VA 22161
Telephone: 703-487-4650

The EPA Project Officer can be contacted at:

Environmental Monitoring Systems Laboratory
U.S. Environmental Protection Agency
Las Vegas, NV 89193-3478

Manufacturing, Machinery & Tools

0263 Neutral Format for HMA Manufacturers

0264 Ion Beam Lithography

0265 Rational Design System for Material Processing

0266 Charpy V-Notch Impact Test Program

0267 Convergent-Filament Nonmechanical Pump—The restrictions imposed by capillaries are avoided.

0268 Oxygen-Free Rinse Water for Electroplating—Deionized water through which nitrogen has been bubbled promotes a strong plated-metal bond.

0269 Multihole Arc-Welding Orifice—A simple modificaiton of the welding torch improves the quality of welds.

Software

0270 Tough Automation Decision Made Easier With New Software

Testing & Instrumentation

0271 Acid Test for Annealing of Welds—A solution changes color if the heat-treated condition has been lost.

0272 Optoelectronic System Would Measure Profiles of Welds—Less inspection time and effort would be required.

0273 Polymeric Electrolytic Hygrometer for Harsh Environments—An improved design reduces vulnerability to organic vapors and dust.

Neutral Format for HMA Manufacturers

Manufacturers of hybrid microcircuit assemblies (HMAs) are turning to computer aided design and manufacturing techniques to help them cope with the increased complexity of these assemblies. For practical implementation of these techniques, data must be exchanged efficiently between CAD and CAM systems.

Researchers from the Center for Electronics and Electrical Engineering and the AMRF are leading the effort to develop a specification for a neutral data format which will facilitate this exchange. The development program is sponsored by the Naval Ocean Systems Center in San Diego.

HMAs are modules or subcircuits that are incorporated into larger electronic assemblies such as printed circuit boards. Connected to these larger assemblies with external leads or pins, HMAs include insulating substrates onto which a mix of silicon integrated circuits and other electronic components (such as thick- and thin-film devices) are interconnected.

In current practice, manual intervention is often required to transfer data between the CAD workstation and the CAM stations that produce HMAs. Even in automated systems, the problem is compounded by the fact that a data "translator" must be written for each pair of machines that exchange data. If there are "n" machines in the system, potentially "n(n-1)" translators are needed.

With a neutral data format or "data hub," each station served translates data once from its own format to the neutral format of the hub and is able to interchange with any other station interfacing with the hub. This neutral format not only permits the interchange of data between CAD and CAM systems but also allows the archiving of the design in a format that can be used in the future, even if the original design or manufacturing system is no longer in use.

Another benefit from a unified representation of HMA data is the ability to do concurrent engineering - the simultaneous application of various automated and human resources to the design of an HMA. Since these resources share common data about the design, the mechanical, electrical, thermal, and testability characteristics of the HMA can be refined in less time than would be required otherwise.

Concurrent engineering also allows application specialists to work in parallel with the designer. Those responsible for the manufacturing, assembly, quality, and reliability of an HMA design can provide suggestions concerning that design from its inception. Since changes can be incorporated early in the design cycle, their cost decreases. The result of effective concurrent engineering is a lower cost product with a shorter design cycle than is possible with traditional methods.

Although several neutral file specifications which describe electrical and electronic functions already exist, none of them contain the data elements needed to represent an HMA design. In addition, their production and test information is limited.

Industry representatives critiqued the NIST neutral format at two workshops held in October. NIST researchers are presently reviewing those comments and developing "A Neutral Format Specification for Hybrid Microelectronic Assemblies," a three-year program.

For Additional Information:

To discuss this effort further, contact:
Thomas Leedy
AMRF Project
Building 220—Room B-163
National Institute of Standards & Technology
Gaithersburg, MD 20899
(301) 975-2410

Ion Beam Lithography

Lithography is a process whereby an image or pattern is imprinted or embossed on a plane surface by the selective removal, addition, or change of composition of the surface material. We are most familiar with photolithography, a process in which a light-sensitive film is exposed to light and is developed, resulting in a surface on which the image to be printed is ink-receptive and the blank area, ink-repellant. In the world of semiconductors, similar processes are involved but, in addition to light, three other sources of lithographic exposure radiation energy can be used: electron beams, x-rays, and ion beams. Each of these lithographic processes can be used in the manufacture of semiconductor microcircuit chips.

Chip designers work to put more and more functions on smaller and smaller microchips utilizing narrower lines and features. This imposes an increasing burden on the manufacturer in that new processes must be developed to produce the new designs. Chip replication techniques are required to achieve submicron pattern resolution and alignment accuracy on the order of 0.1 micron or less in edge smoothness and alignment accuracy. Existing photolithographic methods cannot achieve these requirements because of excessive diffraction and shallow focus. Although electron beams can achieve the required resolution accuracies, most of the e-beam systems currently in use have only a single beam which scans patterns or fields one at a time. Furthermore, beam lithography is plagued by a proximity effect that causes a backscattering of electrons which degrades the resolution of fine lines or features. X-ray lithographic replication imaging systems can remove the production throughput limitations endemic to other lithographic systems with the development of more sensitive resist materials and other improvements.

MASKED ION BEAM LITHOGRAPHY

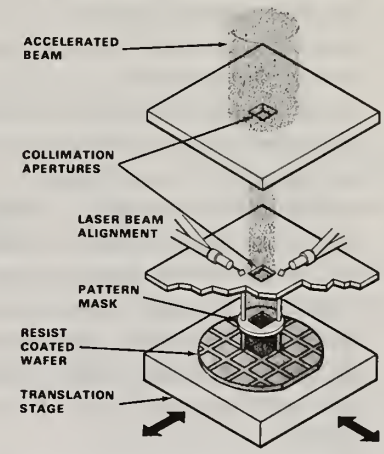

To achieve both submicron replication patterns and throughput compatible with desired production rates, several manufacturing technology (MT) projects were established at the Hughes Research Laboratories (HRL). Each of the projects concentrated on ion beam lithography. Starting in 1980, effort was begun to transition from the conceptual design of an advanced laboratory model which had been developed by HRL to a full-scale, manufacturing-related focused ion beam lithography (FIBL) system. FIBL was similar in concept to e-beam direct write systems in that both used charged particles to expose the resist layer. This resulted in a finely focused

exposure source that could be electronically controlled and deflected. The ion beam system had several significant advantages over the e-beam system. Because of the greater energy deposited per unit volume by the ion beam, the resist exposure sensitivities for the ion beam were several orders of magnitude higher than those for the e-beam; thus, the required exposure time was greatly reduced. By varying the exposure time, it was also possible to control the exposure penetration more precisely. All of these benefits were in addition to avoiding the backscatter or proximity effect characteristic of e-beam systems. The MT-developed FIBL system consisted of an ion source; a means to accelerate and focus the ion beam; fixtures to hold, move, and align the resist-coated semiconductor wafer; and ancillary equipment. All of the needed functions and activities were under computer control.

It is noteworthy that FIBL is of value in ways other than lithographic exposure. Under the MT project, techniques were developed to use FIBL for focused reactive ion etching, mask fabrication and repair, integrated circuit (IC) repair, IC diagnostics, and maskless ion implantation.

Although FIBL achieved a significant improvement in the rate of production of submicron wafers, throughput was still limited by the serial direct-write technique. To overcome this constraint, another MT project was established in 1983 to develop a masked ion beam lithography (MIBL) system. This would involve shadow printing with ions using a channeled or open stencil silicon mask. The technique developed by HRL involved an all silicon channeling mask fabricated by depositing a 2.5-microns-thick, low-stress, amorphous silicon film on the highly stressed, boron-doped, 0.5-micron-thick transmitting/support membrane. Patterns were exposed in the photoresist coatings on the amorphous film and then etched completely through the film to the membrane barrier, without causing the membrane to break. The mask thus formed was then placed parallel to the resist-coated wafer and separated from it by a spacer. The ion beam was accelerated and collimated, and kept aligned by a laser beam device. It then passed through the mask and exposed the resist-coated wafer. The relatively short exposure time for the ion beam avoided temperature problems such as thermal distortion of the mask. The wafer was translated in a "step and repeat" fashion under the stationary mask until the replicated mask pattern was imprinted on the entire wafer surface.

The implementation of these projects will result in substantial benefits to the Navy, the DOD, and the commercial market. Annual cost savings have been estimated at $3.8 million for Navy procurement alone. The technology will be transferred by either building and selling the equipment, or by licensing the design to an equipment manufacturer for sale to the semiconductor industry.

It is anticipated that the end-of-project demonstrations for the FIBL and MIBL systems will take place in late 1989 or early 1990.

For further information contact:
Commander
Naval Air Engineering Center
Attn: Mr. James Koeppel (Code 5321)
Lakehurst, NJ 08335-5100
(201) 323-7449

Rational Design System for Material Processing

Product design, engineering analysis, and automated manufacturing have been isolated pockets of automation in the metalworking industry. Many CAD systems do an excellent job with the design of a product. Others address important issues in engineering analysis. Still others provide excellent tools for CNC. Few, however, provide the full integration of these and other important functions within a common integrated database.

In response to these issues, a Rational Design System for Material Processing (RDSMP) is being developed at NCEMT. A philosophy and approach to problem solving via RDSMP can be applied to all areas of materials processing including forming, welding and casting. Information from material properties tests for processing, geometric representation of the hardware systems of interest, and process modeling are integrated through rational design logic to provide specifications and parameters for optimum processing. The focus on quality is brought to the forefront in the process design stage and is maintained through on-line process control using process models. Each element of RDSMP uses advanced material test equipment, form-feature based CAD, finite element modeling (FEM) for nonlinear deformation and thermal simulation, and artificial intelligence methods for expert design systems.

With an increased emphasis on the integration of engineering design, analysis, and manufacturing, the Center has assembled an integrated CAD/CAM/CIM facility using commercial hardware and software products. The CAD/CAM/CIM component plays a critical role in the development of as drilled or countersunk holes, threaded holes, slots, grooves, bosses, chamfers, and fillets may be embedded directly into the model just as the machinist would represent these features.

The model is available within an integrated object oriented database for FEM analysis, NC programming, and on-screen NC verification of APT code within the manufacturing module. No remodeling is necessary. Once verified, the intermediate APT code is post-processed for a target milling machine and sent via high-speed network to a shop floor machine interface unit which downloads the code into the target machine. The operation is paperless and not prone to errors. It employs standard equipment and software that is commercially available.

The solid modeler passes its geometry (IGES) to a PC CAD drawing system where detailed drawings are prepared. For any solid represented by the modeler, an arbitrary planar cross-section can be extracted (IGES) and passed to the expert system component within the process design system for analysis when material flow considerations are necessary. The solid modeler can provide virtually any information in IGES format about the current solid design to other components. RDSMP because it provides the vehicle for exchange of part geometry with form features and material data throughout the design system. Parts can be modeled effectively using 3D visualization tools and viewed on screen in any orientation. The system uses state-of-the-art workstation technology which provides truly realistic, fully rendered images for viewing and manipulation. Form features such

Information from materials properties testing; process simulation, using both mathematical and physical modeling methods; and geometries for components and tooling from this state-of-the-art CAD/CAM/CIM system are collected and organized into a central database. Expert systems, capturing the experience and knowledge of domain experts, are developed to access and integrate the data.

The existence of central databases assures that all modules of RDSMP have access to the same data. Reduced data redundancy helps to ensure data integrity and eliminates conflicts and inconsistencies. Objects in the database only need to be updated once.

For more information, contact:

Dr. Howard A. Kuhn
Technical Vice President
Metalworking Technology, Inc.
1450 Scalp Avenue
Johnstown, PA 15904
(814) 266-2874

NIST Technology Update

National Institute of Standards & Technology
(Formerly the National Bureau of Standards)
U.S. Department of Commerce, Gaithersburg, MD 20899

Charpy V-Notch Impact Test Program

The most widely used standard for predicting the behavior of steel used in structures and other products has been transferred to NIST from the U.S. Army Materials Technology Laboratory, Watertown, Mass. NIST will continue worldwide service with certified standard reference materials (SRMs) and impact test machine evaluations for the Charpy V-notch test. Each SRM unit consists of five identical V-notched blocks, 10 x 10.x 54 mm in size and a questionnaire on the impact machine. After the five test blocks are broken, the 10 halves are sent with the questionnaire to the NIST Fracture and halves are sent with the questionnaire to the NIST Fracture and Deformation Division, Boulder, Colo. The broken specimens are then examined to verify that proper procedures have been followed, and then the performance of the test machine may be certified. SRM 2092, Certified Low-Energy Samples for Charpy V-Notch Test Machines with an average fracture energy between 11 and 15 ft-lb, and SRM 2096.

FOR ADDITIONAL INFORMATION: Certified High-Energy Samples for Charpy V-Notch Test Machines with an average fracture energy between 66 and 78 ft-lb, are available for $150 per each SRM set from the Office of Standard Reference Materials, NIST, B311 Chemistry Bldg., Gaithersburg, MD. 20899; 301/975-OSRM(6776).

NASA Tech Brief
National Aeronautics and
Space Administration

NASA's Jet Propulsion Laboratory, Pasadena, California

Convergent-Filament Nonmechanical Pump

The restrictions imposed by capillaries are avoided.

A simple device induces a small flow of liquid without the help of moving parts, in the presence or absence of gravity. Unlike other nonmechanical pumps based on wicks or capillary tubes, this one is not limited by internal absorption or restricted cross-sectional area. One important use is expected to be returning liquid condensate in heat pipes. Another might be the collection of samples from clouds or fog.

A prototype transports a slow but steady flow of isopropyl alcohol. The prototype includes 11 filaments on concentric rings in a conical structure (see figure). The filaments, which are ordinary polymeric fishing line, are spaced about 0.25 in. (0.6 cm) apart on the wide end. On the narrow end, the filaments are spaced as closely as possible without touching. The filaments are about 4 in. (10 cm) long.

The liquid enters the pump at the large end of the cone. Drops of liquid move onto the filaments and merge with other drops, forming slugs of liquid held by pairs of filaments. Driven by what are believed to be unbalanced surface-tension forces, the slugs slide to the narrow end of the cone.

In practice, a larger array of filaments would probably be used. The array need not be conical; it might be planar or arranged in another three-dimensional configuration.

This work was done by Earl R. Collins, Jr., of Caltech for **NASA's Jet Propulsion Laboratory.**

This invention is owned by NASA, and a patent application has been filed. Inquiries concerning nonexclusive or exclusive license for its commercial development should be addressed to the Patent Counsel, NASA Resident Office-JPL. Refer to NPO-17301/TN.

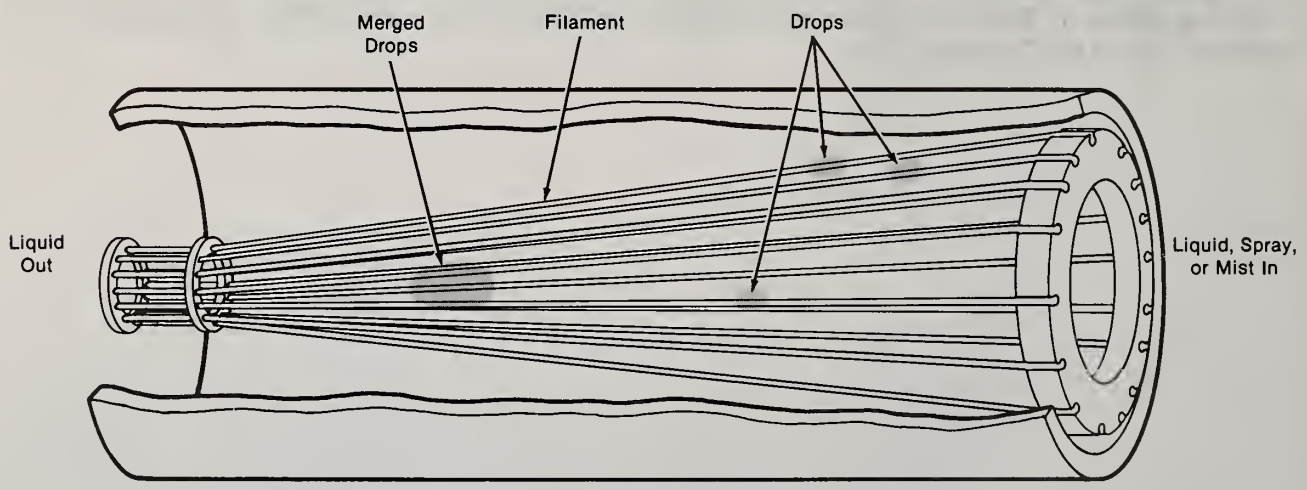

Drops of Liquid Move on filaments from the wide end of the cone to the narrow end. The drops gradually blend with drops on adjacent filaments to form large drops with menisci.

FOR ADDITIONAL INFORMATION: *Contact: Director, Technology Transfer Division, P.O. Box 8757, BWI Airport, MD 21240; (301) 621-0100 Ext. 241*

REFER TO THE NUMBER LISTED AT THE END OF THIS ARTICLE

NASA Tech Brief
National Aeronautics and
Space Administration
Marshall Space Flight Center, Alabama

Oxygen-Free Rinse Water for Electroplating

Deionized water through which nitrogen has been bubbled promotes a strong plated-metal bond.

The removal of dissolved oxygen from deionized rinse water improves the bond between electroplated metal and the base metal. The oxygen is removed by bubbling nitrogen through the rinse water before it is used.

It is common practice in the electroplating industry to keep a metal workpiece immersed in water between electroplating steps to prevent oxygen atoms in the air from combining with some of the atoms on the surface of the metal. Even a thin oxide layer can adversely affect the quality of the bond between the base metal and the electroplate.

Deionized rinse water ordinarily contains a small amount of dissolved oxygen that can oxidize the base metal during a long immersion. Accordingly, electroplated parts for critical applications are customarily allowed to remain in deionized rinse water no longer than 55 seconds before being transferred to the next plating operation. However, in deionized water that has been purged of oxygen by bubbling of nitrogen, parts have been immersed for as long as 10 minutes without degradation of the bonds formed in subsequent plating.

This work was done by Ronnald Bodemeijer and Peter R. Newton of Rockwell International Corp. for **Marshall Space Flight Center**. *No further documentation is available.*
MFS-29516/TN

FOR ADDITIONAL INFORMATION: *Contact: Director, Technology Transfer Division, P.O. Box 8757, BWI Airport, MD 21240; (301) 621-0100 Ext. 241*
REFER TO THE NUMBER LISTED AT THE END OF THIS ARTICLE

NASA Tech Brief
National Aeronautics and
Space Administration
Marshall Space Flight Center, Alabama

Multihole Arc-Welding Orifice

A simple modification of the welding torch improves the quality of welds.

A modified orifice for variable-polarity plasma-arc welding directs the welding plume so that it creates clean, even welds on both Inconel* and aluminum alloys. The orifice differs from its predecessor in that it contains eight additional holes evenly spaced in a circular pattern around the central hole (see figure).

The holes, each 0.015 in. (0.38 mm) in diameter, are drilled with their centers 0.060 in. (1.52 mm) from the edge of the central hole and at a 5° angle toward the center. They eliminate the deflection of the arc caused by the back pressure of the plasma in the torch. Previously, the deflection produced a cutting action that sometimes weakened one side of a weld.

The holes also make it unnecessary to rotate the welding torch. Previously, rotation of the torch was the generally accepted way to correct the alignment of the arc.

*"Inconel" is a registered trademark of the Inco family of companies.

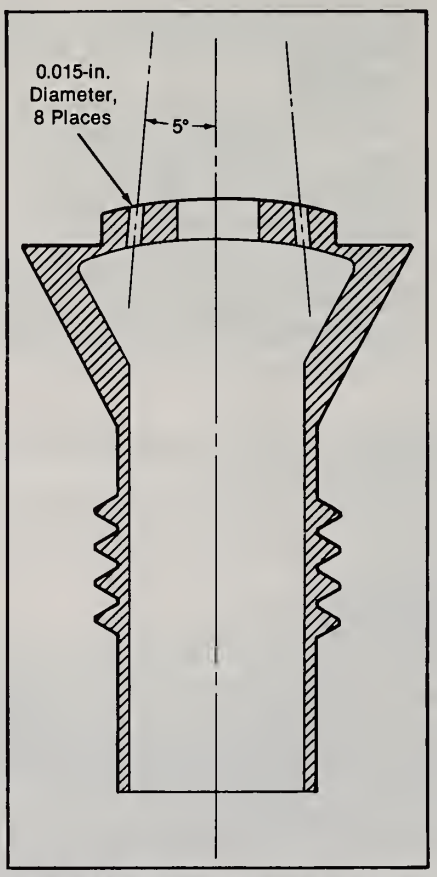

The **Modified Orifice of the Welding Torch**, shown here in cross section, includes eight holes to relieve the back pressure in the plasma. The quality of welds on ferrous and nonferrous alloys is improved as a result.

This work was done by Benji D. Swaim of Martin Marietta Corp. for **Marshall Space Flight Center**. *No further documentation is available.*
MFS-28322/TN

FOR ADDITIONAL INFORMATION: *Contact: Director, Technology Transfer Division, P.O. Box 8757, BWI Airport, MD 21240; (301) 621-0100 Ext. 241*
REFER TO THE NUMBER LISTED AT THE END OF THIS ARTICLE

NIST Technology Update

Software

National Institute of Standards & Technology
(Formerly the National Bureau of Standards)
U.S. Department of Commerce, Gaithersburg, MD 20899

Tough Automation Decision Made Easier With New Software

AutoMan, a microcomputer program, applies modern mathematical techniques to make factory automation decisions easier.

Deciding whether or not to invest in automated manufacturing equipment is a complex problem for shop owners. When the decision is between an existing system and several competing automation schemes, the problem is even more complex.

According to author, business managers have established criteria for making capital investment decisions - the traditional accounting measures such as net present value, return on investment, and life-cycle cost analysis. More and more managers, however, are questioning whether these measures alone are adequate for evaluating automation options.

Automated systems usually offer a number of intangible or difficult to quantify advantages. It comes down to a problem of comparing apples and oranges.

AutoMan accounts for important gains realized by automation, including: engineering performance improvements like faster, more accurate machining, better control over manufacturing, and improved product quality - as well as harder-to-handle intangible benefits like technology advancement, plant modernization, flexibility, and competitive position.

A procedure called the "analytic hierarchy process" is used to break down complex, multifaceted decisions with many possible choices into a series of simple comparisons between only two options: with respect to factor X, how much better is option A than option B? The procedure uses a mathematical technique to assemble all the individual comparisons, with each factor weighted by its importance to the final decision. The result is a single, consistent list of options in order to total desirability.

The program can evaluate up to seven options at once, incorporating up to 49 separate decision criteria. Criteria can be quantitative - financial considerations or engineering performance measures, for example - or qualitative - intangible factors such as flexibility or market position.

Although originally developed to aid plant owners and managers in making automation decisions, AutoMan supports any decision involving tradeoffs among several criteria - whether based on easy-to-measure attributes or intangible ones.

Context-sensitive "Help" screens are available throughout the decision process, and the program includes example files, a tutorial, and a comprehensive manual with glossary and index. AutoMan runs on microcomputers under the MS-DOS operating system with 512 kilobytes of RAM.

FOR ADDITIONAL INFORMATION: The program and documentation are available from the National Technical Information Service, Springfield, VA 22161 for $40 plus $3 for shipping and handling. Order by PH89-221741/NAC. Please specify diskette size 5.25" or 3.5".

NASA Tech Brief
National Aeronautics and
Space Administration
Marshall Space Flight Center, Alabama

Acid Test for Annealing of Welds

A solution changes color if the heat-treated condition has been lost.

A simple test indicates whether a welded joint has retained its postweld heat-treated condition after reworking, including rewelding and grinding. The test can be used instead of the usual Rockwell or Brinell hardness tests when the reworked surface is inaccessible to the hardness-testing apparatus or when the small surface imperfections created by the apparatus are unacceptable.

The new test begins with the application of an oxalic acid etching solution to the reworked surface. If the solution retains its black color, the welded area is still in the heat-treated condition. However, if the color changes to brown, the surface has been annealed by reworking and may need to be heat-treated again.

This work was done by Gary E. Deese and Joseph P. Ellgass of Rockwell International Corp. for **Marshall Space Flight Center**. *No further documentation is available.*
MFS-29598/TN

FOR ADDITIONAL INFORMATION: *Contact: Director, Technology Transfer Division, P.O. Box 8757, BWI Airport, MD 21240; (301) 621-0100 Ext. 241*
REFER TO THE NUMBER LISTED AT THE END OF THIS ARTICLE

NASA Tech Brief
National Aeronautics and Space Administration
Marshall Space Flight Center, Alabama

Licensing Opportunity

Optoelectronic System Would Measure Profiles of Welds

Less inspection time and effort would be required.

An optoelectronic system undergoing development at Marshall Space Flight Center is intended to measure the critical dimensions of a weld during the welding process. Until now, such a measurement has required the removal of the workpiece from the welding fixture for a time-consuming post-weld inspection. The new system could not only save considerable inspection time but could also enable the welding technician to make corrections during the welding process to bring a nonconforming weld back within specifications. Because the measurements would be taken without removing the workpiece from the welding fixture, it would not be necessary to reinsert and realign the workpiece to make a correction.

The system would provide data on the height of the surface at sampling points along cross-weld sampling lines spaced at intervals of 0.1 in. (2.54 mm) along the weld. Each sampling line would be formed by projecting a laser beam across the weld immediately behind the weld puddle. A charged-coupled-device video camera would view the sampling line and transmit the image to image-processing and display equipment.

The processor would translate the sampled data from the image into data on the profile of the weld bead. In addition, it would calculate measures of the underfill, depth and width of undercut, peaking, mismatch, and symmetry and centering of the weld bead (see figure). The system might also be made to examine the coincidence of the second welding pass with the first welding pass (seam tracking). The one-dimensional accuracy of a laboratory version of the system is 0.001 in. (0.025 mm); the accuracy of a practical version is expected to be close to 0.005 in. (0.13 mm).

This work was done by C.B. Dikinson and J.B. Hunt of Martin Marietta Corp. for **Marshall Space Flight Center.**

Inquiries concerning rights for the commercial use of this invention should be addressed to the Patent Counsel, Marshall Space Flight Center. Refer to MFS-28385/TN.

George C. Marshall Space Flight Center
Technology Utilization Officer: Ismail Akbay
Code AT01
Marshall Space Flight Center,
AL 35812
(205) 544-2223
Patent Counsel:
Leon D. Wofford, Jr.
Mail Code CC01
Marshall Space Flight Center,
AL 35812
(205) 544-0024

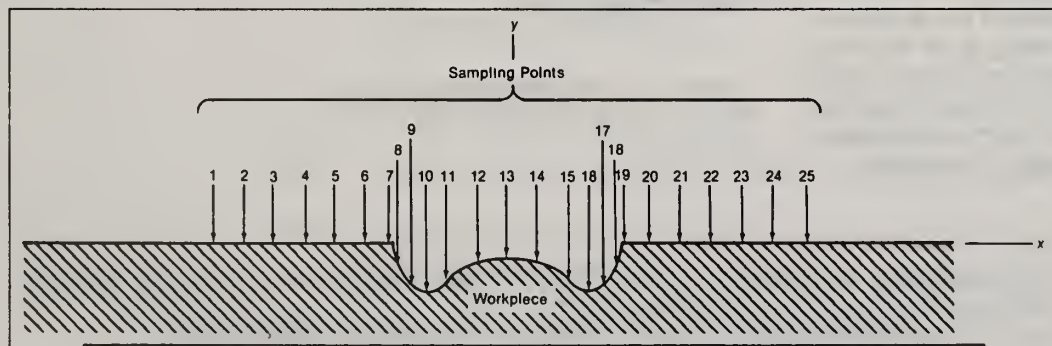

Parameter	Defining Equation
Width of Weld Bead	$x_{19} - x_7$
Underfill	$(y_7 + y_{19})/2 - y_{13}$
Centering of Bead	$(x_{18} - x_8)/2$
Depth of Left Undercut	$y_7 - y_{10}$
Depth of Right Undercut	$y_{19} - y_{18}$
Width of Left Undercut	$x_{11} - x_8$
Width of Right Undercut	$x_{18} - x_{15}$
Mismatch	$[(y_1 - y_7) - (y_{19} - y_{25})]/2$
Symmetry of Weld Bead	$(y_{13} - y_{12}) - (y_{13} - y_{14})$
Peaking (Dihedral Angle Between Welded Plates)	$\tan^{-1}[(y_7 - y_1)/(x_7 - x_1)] - \tan^{-1}[(y_{25} - y_{19})/(x_{25} - x_{19})]$

The **Height of the Surface** (y) is measured as a function of position across the weld (x) at the numbered sampling points immediately after the initial welding pass. The x and y coordinates of the samples are then used to calculate parameters of the weld. Similar measurements can also be taken of the preweld fitup and the final welding pass.

FOR ADDITIONAL INFORMATION: *Contact: Director, Technology Transfer Division, P.O. Box 8757, BWI Airport, MD 21240; (301) 621-0100 Ext. 241*
REFER TO THE NUMBER LISTED AT THE END OF THIS ARTICLE

NASA Tech Brief
National Aeronautics and
Space Administration
NASA's Jet Propulsion Laboratory, Pasadena, California

Polymeric Electrolytic Hygrometer for Harsh Environments

An improved design reduces vulnerability to organic vapors and dust.

The design of a polymeric electrolytic hygrometer has been improved to meet the need for reliable measurements of relative humidity in the harsh environments of pulpmills and papermills. The hygrometer can operate in the presence of organic vapors, dust, traces of sulfur dioxide, acidic vapors, and strong oxidizing agents. It tolerates temperatures near 65 °C and flows of air near 10 m/s easily. Its maximum temperature rating is much higher, near 130 °C.

The basic humidity-sensing element is a piece of Nafion* or similar polytetrafluoroethylene resin with persulfonic acid substitutions that has been treated with lithium hydroxide. The sensing element is sandwiched between noble metal or other relatively unreactive electrodes. Moisture absorbed from the air is ionized in the polymer. Both the H^+ and OH^- ions transport electrical charge. An alternating voltage is applied to the electrodes to measure the conductivity of the polymer, from which the humidity can be deduced.

A previous version of the sensor has contacts of gold plating at the ends of a small ribbon of the Nafion polymer. These tended to separate during use probably because of swelling of polymer. Gold appears not to adhere strongly to the polymer.

The redesigned sensor (see figure) has a short length of sensing polymer and electrode wire. The sensing-polymer strip is mounted in an electrically-conductive silver epoxy, which is very rigid and adheres strongly to the sensing polymer. The sensing polymer and epoxy fill a glass capillary bonded to a polytetrafluoroethylene holder, which has gold-plated pins connecting to the measuring circuits via multicore cable. Contact between the gold-plated pins and the silver epoxy is established through a short platinum wire.

The improved sensor performed well in tests in papermills. It exhibited low hysteresis, rapidity of response, and sensitivity sufficient for use in controlling humidity in the manufacture of paper. It may also be useful for the control of batch dryers in the food and pharmaceutical industries.

This work was done by Daniel D. Lawson, Parthasarathy Shakkottai, and Shakkottai P. Venkateshan of Caltech for **NASA's Jet Propulsion Laboratory**.

**"Nafion" is a registered trademark of Du Pont, E. I., de Nemours & Co., Inc.*

NPO-17365/TN

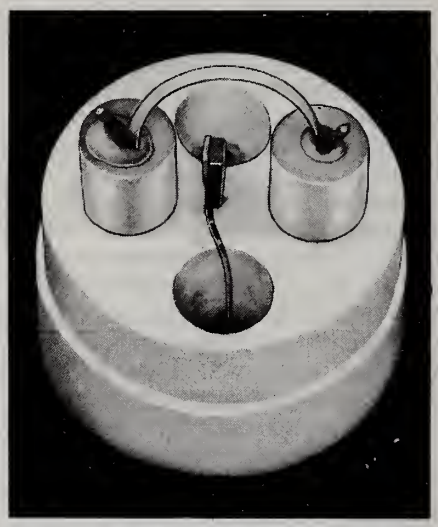

The Redesigned Sensor Head features a shorter, more-rigidly-held sensing element that is less vulnerable than the previous version was to swelling and loss of electrical contact.

FOR ADDITIONAL INFORMATION: *Contact: Director, Technology Transfer Division, P.O. Box 8757, BWI Airport, MD 21240; (301) 621-0100 Ext. 241*

REFER TO THE NUMBER LISTED AT THE END OF THIS ARTICLE

Materials

0274 Synthetic Down Replacement for Thermal Insulation

0275 Transformation-Toughened Zirconia

0276 Thermoplastic Enclosures for Avionics

0277 Zytel-330 Plastic Material

0278 Fracture-Mechanics Analysis on a Distributed-Memory Parallel Processor

0279 New Applications of Silicon Micromachining

0280 'HIPing': From Metal Powders to Reliable Materials

0281 Alumina for Deep-Sea Service

0282 Piecewise-Linear Computation of Creep—An analogy is drawn between thermal and creep strains.

0283 Surrogate Seeds for Growth of Crystals—Larger crystals of higher quality can be grown.

0284 Temperature Dependence of Elastic Constants of Polymers—The theory of small elastic deformations of disordered solids at low temperatures is extended.

Testing & Instrumentation

0285 Electrostatic Measurement of Materials Containing Conductive Fibers

0286 Analytical Instrumentation Method for Inert Gases in Alloy Powders (Licensing Opportunity)

0287 Accelerated Testing of Photothermal Degradation of Polymers—Arrhenius plots reveal maximum safe temperatures.

U.S. Army Research

U.S. Army Natick RD&E Center, Natick, MA 01760

Synthetic Down Replacement for Thermal Insulation

There is a need to reduce the weight and bulk of the insulated cold weather clothing and equipage issued to the individual soldier while maintaining a satisfactory level of environmental protection. A recently completed research contract with Albany International Research Co. has identified a synthetic alternative to down which combine the attributes of down and synthetic fiberfill materials while eliminating their respective performance deficiencies.

Battings produced from spun and drawn polyester microfibers provide the insulation efficiency, weight, and compressional properties of down. Furthermore, down's water absorbency, poor wet loft retention, and long drying time, and fiberfill's poor compressional properties are eliminated. Manufacturing feasibility for these synthetic battings has been demonstrated utilizing a commercially viable process adapted from conventional equipment. A production line has been assembled and is operating to produce the cut staple batting configuration. Commercially, this batting material is being offered in a cold weather jacket by a leading outdoor apparel retailer. To eliminate foreign fiber source dependency, efforts are continuing to establish a domestic fiber supplier(s) capable and interested in manufacturing the needed batting fibers.

FOR ADDITIONAL INFORMATION: Contact Ms. Deirdre Rapacz or Ms. Peggy Goode, U.S. Army Natick RD&E Center, Natick, MA 01760-5019, Tel. (508)651-4273 or 4074; or Mr. Robert Rosenkrans, Technology Transfer Coordinator, U.S. Army Natick RD&E Center, Natick, MA 01760-5014, Tel.(508)651-5296.

U.S. Army Fact Sheet

Transformation-Toughened Zirconia

The U.S. Army Materials Testing Laboratory (MTL) is surveying the properties of transformation-toughened ceramics for possible heat-engine applications. The report being reviewed covers the important issue of the effects of long-term, elevated-temperature exposure on room-temperature properties and on phase stability of yttria-stabilized zirconia (Y-TZP). This ceramic has an unusually good combination of room-temperature strength and fracture toughness and is a good thermal insulator. Its mechanical properties depend on being able to retain the tetragonal crystal structure during processing. During loading this structure converts to the monoclinic structure, thus allowing for some localized relief of stress concentrations. The MTL experiments were undertaken because there is concern that high-temperature exposure in a heat-engine application will lead to grain growth and premature conversion to the monoclinic phase and loss of load-carrying capacity.

Seven commercial grades of Y-TZP were tested after exposure in the unstressed condition for times ranging from 0 to 500 hours at 1000 C in an atmosphere of laboratory air. The strongest grades were prepared either by isostatic or uniaxial hot pressing; all others were sintered. Room-temperature bend strengths of the various grades were in the range from 587–1192 MPa (85–173 ksi) and decreased by 5 to 20 percent after 500 hours exposure, with one exception. That grade suffered a loss in strength of almost 60 percent accompanied by a sharp increase in monoclinic content; for the other grades there were no large changes in monoclinic content.

Both before and after exposure the stronger grades tended to have lower toughnesses and vice versa. As-received toughnesses varied from 4.6 to 8.5 MPa $\sqrt{m}$ (4.2–7.7 ksi $\sqrt{in.}$) and, in contrast to strength, exposure-induced toughness increases were observed, ranging from nil to +30 percent. Exposure also did not affect density, elastic modulus, or hardness, with the exception of the grade exhibiting a large strength loss.

Grain sizes were small (<1 μm) in all grades and essentially unaffected by high-temperature exposure. Failure of bend bars most often occurred from pores, but instances of failure origins at large grains, inclusions, and machining damage were also observed.

FOR ADDITIONAL INFORMATION: A copy of the report is available from NTIS, Springfield, VA 22161; (703)487-4600.
NTIS order number: ADA 207064/NAC
Price code: A03

Technology Fact Sheet
U.S. Air Force

Thermoplastic Enclosures for Avionics

SYNOPSIS:
Thermoplastics are engineering plastics used to fabricate form, fit, and function replacements for metal avionics enclosures as well as other non-structural components. Thermoplastics like polyetheretherketone (PEEK) are corrosion resistant, durable, and lightweight. The Producibility, Reliability, Availability, and Maintainability (PRAM) Office demonstrated this technology on the F-16 Airborne Video Tape Recorder Panel (as seen in the photo to the right) and the Missile Remote Interface Unit (as seen on reverse side) in PRAM Project 36386-01. These components can be manufactured using injection molding techniques (see TechTIP 88014).

Airborne Videotape Recorder Panel

APPLICATIONS:
Current: F-16 Airborne Videotape; Recorder Panel Missile Remote Interface Unit
Future: ALE-40 Chaff Flare Dispenser (used on multiple aircraft)

AIR FORCE R&M 2000 GOAL HIGHLIGHTS:
Increase Combat Capability: Corrosion resistant, 30% weight savings
Decrease Costs: $4.2M useful life savings on F-16

BENEFITS/DRAWBACKS:
The benefits of thermoplastics include corrosion resistance, durability, and weight savings. PRAM estimates that in the F-16 applications, the thermoplastic boxes will weigh 30% less than the original metal boxes they replace. Life cycle tests indicate these boxes will last three times as long as metal boxes. This results from the inherent corrosion resistance of thermoplastics. Hence, there are fewer grounding faults and fewer box replacements. These parts could be put into future production block aircraft and be used as preferred spares on existing aircraft/systems. Thermoplastic enclosures can be coated to achieve the required level of Electromagnetic Interference (EMI) resistance and surface conductivity characteristics. A plating process coats both the inside and outside with an electroless nickel over copper. Thermoplastics make use of diverse properties, which, when properly engineered (continued on reverse side)

DOCUMENTATION:
Plastics: Thermoplastics and Thermosets, 8th Edition; Desk Top Data Bank, Published by International Plastics Selector, Inc, 1986
Handbook of Thermoset Plastics; Edited by Sidney Goodman; published by Noyes Publications, 1986

BENEFITS/DRAWBACKS (continued):

give the material inherent advantages over metals. They offer good vibration characteristics and lower radar signatures than metal avionics enclosures. The thermoplastic enclosures are thermal and electronic insulators, but they can be made electronically conductive with special coatings. In many cases, thermoplastics can be manufactured at a lower cost than metallic parts. The useful life savings (acquisition costs plus life cycle costs) is estimated to be $4.2M for the F-16 Airborne Videotape Recorder Panel and the Missile Remote Interface Unit. EMI shielding, chemical compatibility, flammability, and combustion toxicity requirements are a few areas which require consideration based on the type of thermoplastic and its application. You will need to test your boxes to assure they meet the Underwriters Laboratories rating of "aviation worthy." The thermoplastic boxes used on the F-16 are less toxic than the aluminum boxes they replace.

Some drawbacks include maintenance of exterior coatings for EMI shielding and surface conductivity. This coating is approximately two mils in thickness and can be compromised by improper handling and maintenance. Large scratches need to be recovered with nickel paint. Perhaps the biggest drawback is the relative inability for thermoplastics to conduct heat. As such, they are poor heat sinks. Hence, you shouldn't use thermoplastics when the avionics box itself is required to be a heat sink.

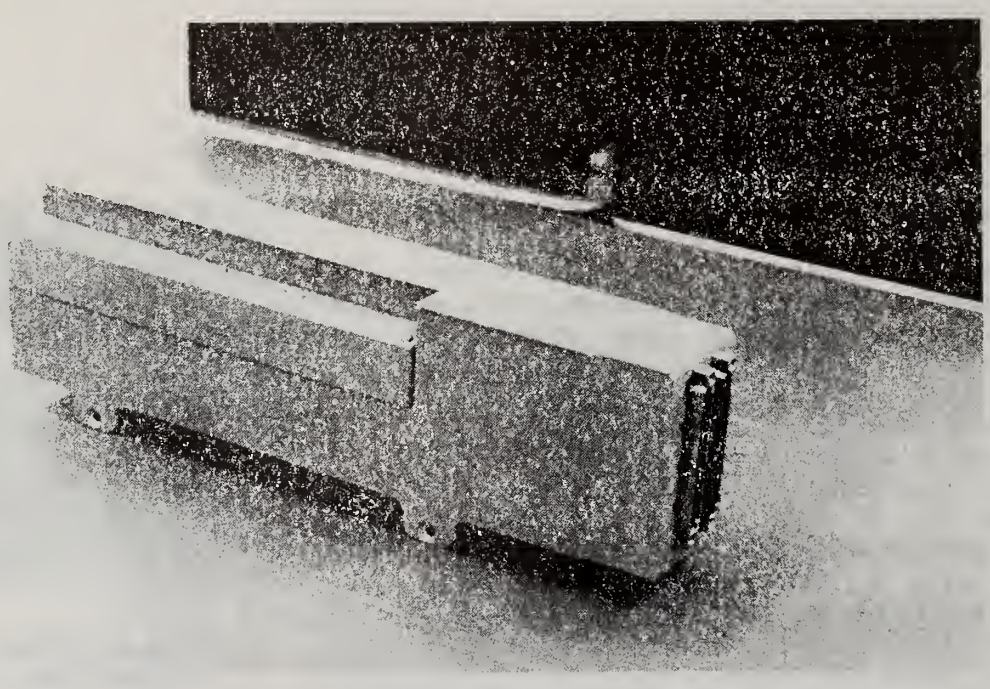

F-16 Missile Remote Interface Unit

TECHNOLOGY CONTACT:

Office: ASD/AEMOF, WPAFB OH 45433
(Lt Sam Marmon, PRAM Engineer)
AUTOVON: 785-6632
Comm: (513) 255-6632

USER CONTACT:

Office: OO-ALC/MMA-3, Hill AFB UT 84056
(Mr Claude Nixon, ALC Engineering)
AUTOVON: 458-9404
Comm: (801) 777-9404

This TechTIP report was produced as part of the Technology Transfusion Opportunities Program at the Air Force Coordinating Office for Logistics Research (AFCOLR/TT). Determining the feasibility of using this technology in a particular application requires a thorough evaluation of system requirements and the capabilities provided by the technology. For further information on the subject technology, please contact the listed organizations. Comments or questions about the Technology Transfusion Opportunities Program are welcomed and should be addressed to AFCOLR/TT Wright-Patterson AFB, OH 45433-5000 or call AUTOVON 785-1606, Commercial (513) 255-1606.

Technology Fact Sheet
U.S. Air Force

Zytel-330 Plastic Material

SYNOPSIS:

Currently, the number one failure item for the Military Airlift Command is the glass C-141 Wingtip Light Lens. The lens failure problem is compounded by spares not readily available in the supply system, resulting in extensive aircraft downtime. Zytel-330, an amorphous transparent nylon, is the answer to the problem. Many of its material qualities made it an excellent replacement for the original glass wingtip lens. Zytel-330 is transparent and has high strength and stiffness, excellent retention of properties over a wide humidity range, good electrical properties, high resistance to flammability, and resistance to chemicals and flexural fatigue. Zytel-330 can be processed by injection molding, extrusion, or blow molding to yield a wide variety of parts. The combination of characteristics of Zytel-330 makes it a material of choice for fuel and air filter bodies, instrument gauge (continued on next page)

Plastic Wingtip Light Lens

APPLICATIONS:

Current: C-141 Aircraft wingtip lens.

Future: Fuel and air filter bodies, instrument gauge lenses, sight glasses, lighted switches, light-emitting diode lenses, electrical/electronic terminal blocks and connectors, fuse box and electrical relay covers, gears, and blow molded lubricant reservoirs.

AIR FORCE R&M 2000 GOAL HIGHLIGHTS:

Increase combat capability: Increased Mean Time Between Failure (MTBF), the lens is virtually unbreakable, leads to increased aircraft availability.

Decrease manpower requirements: Lens does not have to be replaced for 10,000 flight hours thereby decreasing current maintenance manpower requirements.

Decrease Cost: $6.00 versus $45.00 for the glass lens.

BENEFITS/DRAWBACKS:

The main benefit is the increased service life which comes from the inherent durability of the Zytel-330 plastic lens. In terms of decreased cost and weight, Zytel-330 plastic material offers significant advantages in the limited C-141 wingtip light lens tests. The weight is half that of glass. Zytel-330 offers excellent transparency even in thick sections. Compared with other amorphous nylons and polycarbonate it is unusually strong and stiff. Unlike other nylons, it retains strength and stiffness even at 100% relative humidity. Zytel-330 possesses high Rockwell hardness of R128, good abrasion resistance and excellent resistance to flexural fatigue even at moderate (continued on next page)

DOCUMENTATION:

AFALC/RAOF (PRAM) project, Reference Number 34587-01. "Plastic C-141 Wingtip Light Lens."

SYNOPSIS (CONTINUED):

lenses, sight glasses, lighted switches, light-emitting diode lenses, electrical/electronic terminal blocks and connectors, fuse box and electrical relay covers, gears, and blow molded lubricant reservoirs. Zytel-330 can be considered as a replacement for glass, more costly transparent nylons, and polycarbonate in hostile environments. Zytel-330 can be readily molded on standard reciprocating screw machines suitable for nylon.

BENEFITS/DRAWBACKS (CONTINUED):

stress levels. Zytel-330 has a Heat Deflection Temperature of 120°C (248°F). Like other nylons, Zytel-330 has good electrical insulation properties and much better radar tracking resistance than many polycarbonate grades. Underwriters Laboratories flammability rating is UL 94 V-2. Zytel-330 has very low permeability to hydrocarbons (like jet fuel and gasoline), oxygen, carbon dioxide, and other chemicals. Zytel-330 has good resistance to aliphatic and aromatic hydrocarbons, mineral oils, salt solutions, dilute alkalis, and many alcohols and ketones. Zytel-330 NC-10 has a faint yellow cast, but a color masking agent available from Du Pont or other color concentrate producers can be added at a 1:50 ratio to yield a colorless part. Zytel-330 can be readily colored for transparent, translucent, and opaque properties.

Significant cost savings are achieved in the application of Zytel-330 on the C-141 aircraft wingtip light lens. When the original glass lens was damaged, technicians placed an order through base supply at a cost of $45.00 per lens. A critical item Air Force wide, it was zero balance in supply, so the next higher assembly (the wingtip light assembly) was ordered to obtain the light lens at a cost of $300.00. All this can now be averted with a $6.00 Zytel-330 wingtip light lens.

Zytel-330 without an ultraviolet light absorbing coating is not recommended for prolonged exposure to UV light. UV-absorbing coatings may be applied to parts molded from Zytel-330, if desired. Another major drawback of this product is the lack of an outside protective coating to prevent scratching. Without such a coating, external applications are limited to subsonic aircraft. Molded parts made of Zytel-330 are adversely affected by strong acids, phenol, glycol solutions, and prolonged exposure to extremely hot water. It is advisable to test chemical stability under conditions close to those of actual practice.

TECHNOLOGY CONTACT:

Office: AFALC/RAOF WPAFB, OH 45433-5000
(MSgt Jim Bealer)
AUTOVON: 785-3442
Comm: (513) 255-3442

USER CONTACT:

Office: HQ MAC/LGR SCOTT AFB, IL 62225
(SMSgt Harvey)
AUTOVON: 576-4771
Comm: (618) 256-4771

This TechTIP report was produced as part of the Technology Transfusion Program at the Air Force Coordinating Office for Logistics Research (AFCOLR/TT). Determining the feasibility of using this technology in a particular application requires a thorough evaluation of system requirements and the capabilities provided by the technology. For further information on the subject technology, please contact the listed organizations. Comments or questions about the Technology Transfusion Program are welcomed and should be addressed to "TechTIP", AFCOLR/TT, Wright-Patterson AFB OH 45433-5000 or call AUTOVON 785-1606, Commercial (513) 255-1606.

Oak Ridge National Laboratories

Fracture-Mechanics Analysis on a Distributed-Memory Parallel Processor

For more than a decade, ORNL has conducted research in fracture mechanics as part of the Heavy Section Steel Technology (HSST) program sponsored by the Nuclear Regulatory Commission. The HSST program is devoted to assessing and extending the margin of safety against fracture of the thick-walled steel pressure vessels used in light-water-cooled nuclear power reactors. This program couples material and structural testing with analytical studies using finite-element fracture mechanics to determine the behavior and structural integrity of steel pressure vessels containing crack-like flaws.

The fracture-mechanics approach accepts that some flaws will be present in a structure, but assumes that conditions can be established to ensure that the flaws do not grow to an unacceptable size during the lifetime of the structure. Life prediction in fracture mechanics requires calculation of crack-tip stress intensity parameters to quantify both stable crack growth and the conditions for unstable fracture in complex geometries under complex loads.

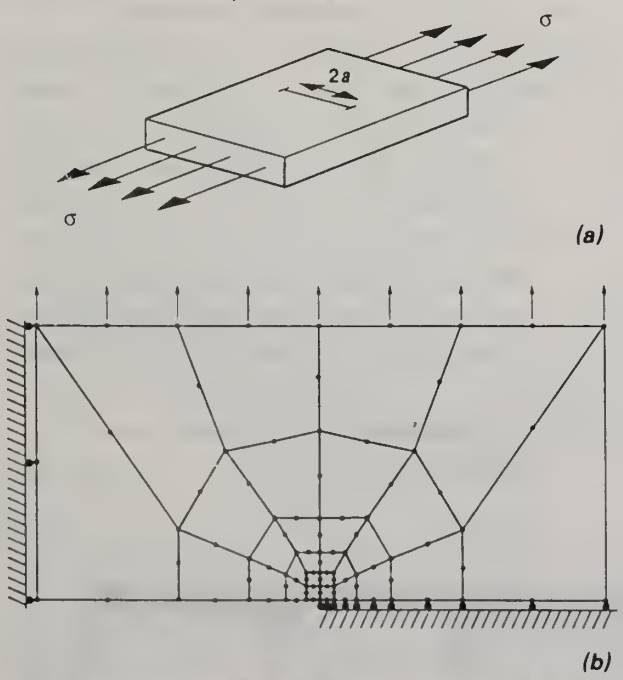

Fig. 1. ***(a)*** **Icon for the simple fracture problem of a plate with a center crack of length 2*a* loaded mechanically to the stress level *σ*.** ***(b)*** **Finite-element mesh of problem in** ***(a)*** **containing 28 elements and 101 nodes. The roller boundaries on the left and bottom sides provide symmetry. Stress is applied as loads on top nodes. The crack is contained in the bottom-center two elements.**

Over the last decade, numerical techniques such as the finite-element method have been established as powerful aids to fracture analysis. However, these numerical solutions are often executed at a considerable computing cost, especially for nuclear and aerospace applications in which a high degree of accuracy is necessary. Computation research being done for the HSST program has several goals. Two goals in the area of parallel computing are mapping key finite-element algorithms to a parallel processor and demonstrating the possible savings in execution time when parallel processing replaces serial processing.

A parallel-processing code was developed based on a fracture-analysis system originally designed to accommodate the limitations of microcomputers. The parallel code was designed to use a large number of processors if the problem size warrants it. This program contains a virtual crack extension technique for evaluation of the crack-tip stress-intensity parameters and deals with 2-dimensional geometries, linear elastic material behavior, and static loadings.

A parallel multifrontal solution technique, which assigns one front to each processor, was developed and tested using a hypercube parallel-processing computer. For the test, a small example problem lending information to crack extension in plates (such as neutron-hardened boiler plates) exposed to thermal shocks (Fig. 1)

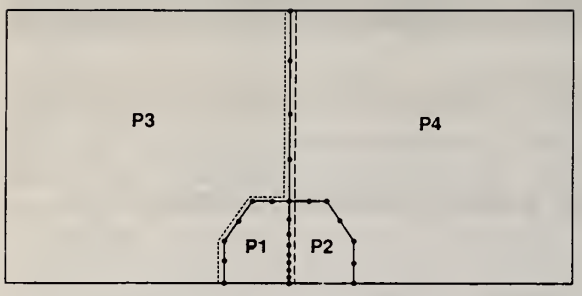

Fig. 2. Partitioning of sample into four blocks/ subproblems, with two super boundary elements (SBEs) delineated by dashed lines. The dots are the nodes on the block boundaries belonging to the SBEs. Each block (P1–P4) is assigned to its own hypercube processor.

was run. This example was implemented on five processors (four hypercube processors and one host).

The problem was partitioned into four subproblems, each of which was assigned to its own processor. Additional "super boundary elements," around which communication and redundant calculations revolve, were also defined (Fig. 2). Each processor operated on the assumption that it was solving an entire problem although only the host processor knew the complete structure of the test problem. Overall execution time for the the test problem was decreased by more than 58% in comparison with serial processing. Even larger savings are possible when problem size and/or complexity increase. More complex problems, such as some nonlinear fracture problems, could greatly benefit from employing ideas from this method of finite-element fracture analysis.

Additional information:

Office of Technology Applications
Oak Ridge National Laboratory
P.O. Box 2008
Oak Ridge, TN 37831-6257
(815) 574-4192

Department of Energy

Technology Application

Oak Ridge National Laboratories

New Applications of Silicon Micromachining

The use of photolithography and anisotropic etching of silicon wafers to make strong, thin membranes has created a large family of miniature sensing devices such as pressure transducers and accelerometers. Engineers at ORNL have fabricated thin windows by anisotropic chemical etching of single-crystal silicon. These windows are mechanically strong and yet transparent to many kinds of radiation. Two applications of these windows have been developed: a rugged alpha detector and a fluid sample cell for small-angle X-ray scattering.

In conventional alpha-radiation detectors, the photomultiplier tube is shielded by a window that blocks ambient light but allows alpha particles to pass through. Aluminized Mylar, the most commonly used window material, is easily damaged by particles such as dirt and sand. Therefore, it is expensive to use alpha detectors in the field because they have very short life expectancies. Experiments have shown that etched silicon is an acceptable replacement for aluminized Mylar.

The new design (Fig. 1) is substantially more resistant to environmental contamination and mechanical damage than the conventional design. This rugged alpha detector is physically compatible with existing instruments, so it can be easily retrofitted to replace the more fragile Mylar-window design. Its detection efficiency is comparable to the older detector, yet it is highly resistant to thermal shock, abrasion, and moisture.

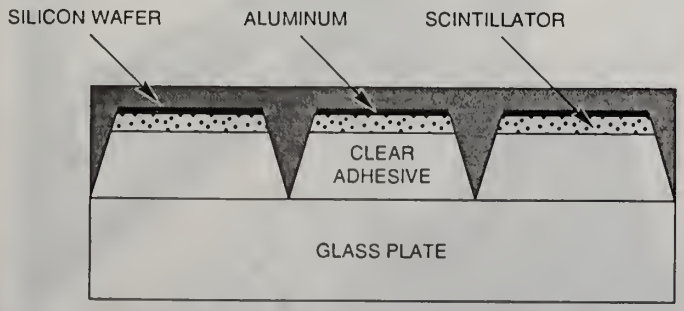

Fig. 1. Design for a rugged alpha detector using a chemically micromachined silicon wafer. Thicknesses are not to scale.

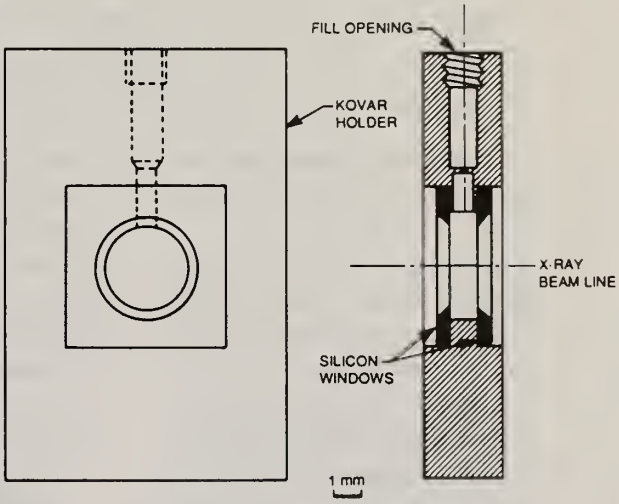

Fig. 2. Fluid sample holder for small-angle X-ray scattering. Note that a hole could also be drilled from the bottom to facilitate filling, draining, and cleaning.

The second application of etched silicon wafers that was studied was their use as containers for liquid samples to be studied by the ORNL 10-m small-angle X-ray scattering (SAXS) camera (Fig. 2). It is difficult to examine liquid samples in the SAXS because the X-ray beam line is evacuated, and the liquid must therefore be contained in a sealed capsule with thin windows. Two common window materials are beryllium and Mylar; both materials present difficulties. Beryllium windows have unacceptably high

scattering, and Mylar windows tend to balloon outward, changing the effective sample thickness. Experiments have shown that etched silicon wafers would not have either of these drawbacks; they would also be able to form strong, airtight joints by soldering to low-expansion alloys.

R. J. Lauf et al., *New Applications of Silicon Micromachining*, ORNL/TM-10590, Oak Ridge National Laboratory (June 1988).

Additional information:

Office of Technology Applications
Oak Ridge National Laboratory
P.O. Box 2008
Oak Ridge, TN 37831-6257
(815) 574-4192

NIST Technology Update

National Institute of Standards & Technology
(Formerly the National Bureau of Standards)
U.S. Department of Commerce, Gaithersburg, MD 20899

"HIPing": From Metal Powders to Reliable Materials

Consolidating rapidly solidified metal powders into close-to-final, or near-net, shapes through hot isostatic pressing (HIPing) may turn out to be a very reliable way to make parts out of advanced alloys, such as titanium aluminide. This high-performance material has great potential for airframe components and engine parts because it is lightweight and performs well at very high temperatures. But engineers need to overcome a variety of processing barriers before titanium-aluminide materials with the required internal properties can be produced cost effectively.

Materials scientists at the National Institute of Standards and Technology are working with a team of scientists and engineers from industry, universities, and government to develop the measurement and control tools needed to automate the HIPing process. The collaborative research effort is jointly supported by NIST and the Defense Advanced Research Projects Agency (DARPA).

NIST metallurgist Robert J. Schaefer monitors the compaction of rapidly solidified titanium-aluminide metal powders.

To produce titanium-aluminide alloys using hot isostatic pressing, rapidly solidified metal powders are sealed in a canister or mold and placed inside a furnace. The material is then heated to approximately 1100 °C and compressed into solid shapes by hydrostatic pressures up to 200 megapascals, or 30,000 pounds per square inch.

Robert J. Schaefer, project leader in the NIST metallurgical processing group, says, "Our goal is to demonstrate that the required microstructural properties for titanium-aluminide alloys can be met by automated HIPing methods."

Schaefer points out this will require new information for monitoring the overall HIPing process and measurement data for controlling the densification of metal powders to obtain the correct microstructures.

Concepts for the intelligent processing of materials (IPM) are being applied to the HIPing project. This is a new computer-based approach for producing advanced materials that are far superior to those used today.

The special properties of advanced materials, such as exceptional strength and resistance to heat, result from microstructures designed and built into them during processing.

The researchers are developing sensors, process models, and an "expert" computer system to automate the entire production cycle of titanium-aluminide alloys and composites, from raw metal powders to finished parts. These measurement tools will ensure the production of reliable materials with the desired properties.

Neville Pugh, chief of the NIST Metallurgy Division, says, "The HIPing project offers us an opportunity to develop and test various measurement concepts for the automated control of materials processes in the same way robotics have been tested for discrete parts manufacturing."

Pugh says the HIPing of expensive metal alloys also provides a significant savings in materials. With near-net shapes, producers normally will lose no more than 10 to 20 percent of the bulk material in the final machining of a part. With conventional methods, manufacturers typically utilize only 10 to 30 percent of the material; the remainder becomes scrap.

NIST eddy current and ultrasonic sensors to measure the density and microstructures in the metal powders during consolidation will be incorporated in an IPM computerized control system being developed for DARPA by BDM International, Inc. The IPM controller will permit producers to take on-line measurements and evaluate the information with process models to control the properties of metal powders during HIPing.

In a collaborative effort with NIST, University of Cambridge metallurgist Michael F. Ashby is developing the process models that will predict the density of metal powders based on pressure, temperature, and time. NIST metallurgist Roger B. Clough also is developing mathematical models of the mechanical deformation process during HIPing.

After the IPM controller system has been completed, plans call for various components to be installed in an industrial setting for tests under NIST supervision.

NIST also has established an advisory group for industry, university, and government collaboration in the HIPing program. Scientists and engineers may participate in the research effort through the NIST Research Associate Program, which provides them the opportunity to work at the Institute on projects of mutual interest with salaries paid by their employers.

For information on the cooperative program to automate the processing of titanium-aluminide alloys by HIPing, contact: Robert J. Schaefer, NIST, A153 Materials Bldg., Gaithersburg, MD 20899, 301/975-6162. *R.R.*

U.S. Navy Technology Application

Alumina for Deep-Sea Service

The use of ceramics for deep-sea pressure housings is being investigated at the Naval Ocean Systems Center. The report points out that the most critical property is good buoyancy to allow both for high payloads and for optimum range and speed. In terms of material parameters, a good compressive strength:weight ratio is desired; in this respect glass-ceramics and alumina are both an order of magnitude better than steel.

The outstanding potential for both glasses and ceramics for deep undersea service has been recognized for over 30 years. However, because of the brittleness problem, applications have been limited to buoys, which are unmanned and do not require maneuverability. While some abandoned efforts to construct manned submersibles are described in the report, the recent research has focused on maneuverable unmanned vehicles. In this application, a major problem has been the design of joints, particularly ones that can withstand repeated pressurizations and depressurizations.

The NOSC solution is to epoxy-bond titanium alloy (Ti-6Al-4Va) U-shaped end channels to the alumina cylinders being butt joined. The channels are then epoxy-bonded to either side of a titanium-alloy stiffener ring. A similar approach is used to affix titanium alloy or ceramic end caps to the alumina cylinders. The resulting cylinders survived proof tests of 10 ksi and 1000 pressure cycles to 9 ksi, suggesting reliability at depths up to 20,000 feet.

The author points out that 94 percent pure alumina is the cost-effective solution since purer grades do not provide sufficient property improvement to justify their greater cost. However, there is a scale-up problem from the 12-inch diameter cylinders fabricated at NOSC; residual stresses during fabrication of thick-walled alumina cylinders limit commercially-available diameters to 24 inches.

FOR ADDITIONAL INFORMATION: A copy of the report is available from NTIS, Springfield, VA 22161; (703)487-4600.
NTIS order number: ADA 197833/NAC
Price code: A03

NASA Tech Brief
National Aeronautics and
Space Administration
Ames Research Center, Moffett Field, California

Piecewise-Linear Computation of Creep

An analogy is drawn between thermal and creep strains.

The theory of elastic and inelastic stresses and strains in isotropic materials can be blended with finite-element computer programs to calculate residual stresses due to creep in structures. An analogy is drawn between thermal expansion and creep, enabling the use of the thermal-stress computational approach to calculate the creep stresses and strains. An overall transient solution is obtained by piecewise-linear iterations.

The theoretical basis is provided by Hooke's law for stresses and strains in an isotropic material, plus the expression of the total strain as the sum of elastic and inelastic components. The solutions of problems in inelasticity can be changed to those of problems in elasticity via a general analogy in which the distribution of strains in a body subject to a given set of body and surface forces with inelastic strain is the same as the distribution of strain in an identical body with no inelastic strain but with an additional set of body forces.

The inelastic component of strain is decomposed further into a component due to creep and a component due to thermal expansion. (Although thermal expansion can be reversed by a reversal in the increment of temperature, at a given fixed temperature for which a calculation is performed, the accumulated thermal expansion behaves mathematically as though it were an irreversible inelastic strain.) The difference between the total and inelastic strains is then substituted for the elastic strain in Hooke's law.

A representative computation (see figure) begins with the entry of data on the geometry, forces, temperatures, and properties of the materials, for use in calculating the elastic and thermal stresses on elements of the structure. The computed stresses in each element are inserted in the applicable creep law to determine whether they are sufficient to make that element creep. If the element is found to creep, then its creep strain during a specified interval is calculated on the basis of the creep law, which specifies the rate of creep as a function of the stress and temperature. The interval is the increment of time that is chosen to be short enough to enable the solution to converge to acceptably accurate values.

The creep strain in each creeping element is then converted to an equivalent fictitious component of thermal strain — preferably by adjusting the coefficient of thermal expansion. In the case of a transient problem, at this instant different temperatures and forces are submitted, and a new set of stresses in the elements is computed for comparison with the creep laws. Additional creep strains are compiled and converted to additional fictitious thermal expansions so that the cycle can be repeated for more increments of time. By this iterative process, the operating stresses and changes in operating stresses with time are identified.

The total residual stress caused by creep at the end of a given number of increments of time is computed from the cumulative creep strains of the individual elements. First, the structure is treated as being at a uniform temperature. Next, the coefficients of thermal expansion of the creeping elements are altered to simulate the cumulative creep strains previously computed for those elements. Finally, the altered coefficients are submitted as new inputs so that the residual creep stresses are calculated as though they were the result of elastic strains.

This work was done by Jerald Jenkins of **Ames Research Center**. *Further information may be found in NASA TM-86813 [N87-23995], Price Code: A02 "Inelastic Strain Analogy for Piece-wise Linear Computation of Creep Residues in Built-Up Structures.*

Copies may be purchased from the National Technical Information Service, Springfield, Virginia 22161, Telephone No. (703) 487-4650. Rush orders may be placed for an extra fee by calling (800) 336-4700.
ARC-12142/TN

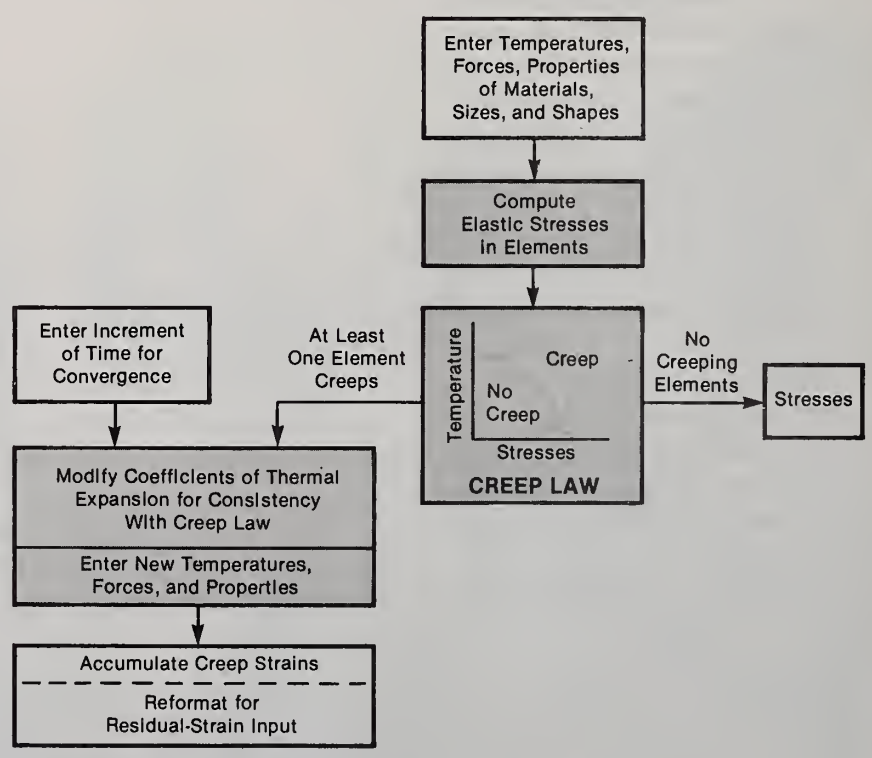

Creep Stresses in a structure are computed in an iterative process in which cumulative creep strains are treated as fictitious changes in coefficients of thermal expansion.

FOR ADDITIONAL INFORMATION: *Contact: Director, Technology Transfer Division, P.O. Box 8757, BWI Airport, MD 21240; (301) 621-0100 Ext. 241*
REFER TO THE NUMBER LISTED AT THE END OF THIS ARTICLE

NASA Tech Brief
National Aeronautics and
Space Administration

NASA's Jet Propulsion Laboratory, Pasadena, California

Surrogate Seeds for Growth of Crystals

Larger crystals of higher quality can be grown.

An alternative method for starting the growth of a crystal involves the use of a seed crystal of different material instead of the same material as that of the solution. The method is intended for growing single-crystal proteins for experiments but is applicable in general to the growth of crystals from solutions and may also be applicable to the growth of semiconductor or other crystals from melts.

The material for the surrogate seed must be insoluble in the solution and have a crystal lattice, the form and dimensions of which match those of the material being grown as closely as possible. Such a material could be selected from a computerized data bank of materials.

Because the seed material does not dissolve in the solution, the temperature of the solution can be raised substantially higher than if a seed of the material to be grown were used. At the higher temperature, potential crystal-nucleation sites are dissolved; with proper control of conditions, nucleation should occur only at the interface between the solution and the seed. As a result, a single large crystal with few, if any, imperfections can be grown.

This work was done by Paul J. Shlichta of Caltech for **NASA's Jet Propulsion Laboratory.**
NPO-17339/TN

FOR ADDITIONAL INFORMATION: *Contact: Director, Technology Transfer Division, P.O. Box 8757, BWI Airport, MD 21240; (301) 621-0100 Ext. 241*
REFER TO THE NUMBER LISTED AT THE END OF THIS ARTICLE

NASA Tech Brief
National Aeronautics and
Space Administration

Temperature Dependence of Elastic Constants of Polymers

The theory of small elastic deformations of disordered solids at low temperatures is extended.

Two papers extend the theory of the elastic constants of disordered solids to finite temperatures below their glass-transition temperatures. These and related studies are part of the effort to understand the macroscopic mechanical properties of glassy polymers and similar materials on the basis of mathematical models of atoms arranged in lattices of unit cells, governed by the Lennard-Jones 6,12 potential

$$U(R) = -AR^{-6} + BR^{-12}$$

where A and B are constants and R represents the distance between atoms.

The first paper, entitled "Elastic Constants of Disordered Solids II: Temperature Dependence," applies to cryogenic temperatures. As in previous studies devoted to this theory, it begins by stating some relationships between the mathematical models and macroscopic thermodynamical properties. It retains the previous assumptions of anisotropic stress, strains small enough to remain within the linear elastic range, and central interparticle forces.

At sufficiently low temperatures, the motion of the reference particle (the atom in question when computing on the microscopic level) is treated by a quasi-harmonic approximation, in which the particle is restricted to excursions close to the center of its unit cell. Under this approximation, all potential-energy terms of order higher than quadratic in the displacement are negligibly small, and the motion of the reference particle at and near zero strain is that of an anisotropic harmonic oscillator, the frequency of which depends on the volume and the strains.

This approximation accounts for an initial linear increase of the Poisson ratio μ and a similar decrease of Young's modulus Y with increasing temperature. Numerical evaluation of the complete cell potential and of the free-volume integral shows that as temperature increases further, the increases in Y and μ level off to plateaus. The numerical evaluation also indicates a third, higher temperature region in which μ increases and Y decreases more rapidly. The bulk modulus is but weakly dependent on temperature in these regions.

The results for the third region require further examination, for upon a further increase in temperature, the model becomes invalid and predicts a reversal in the sign of the temperature coefficient of Y and impermissible values for μ. This is qualitatively similar to the performance of the cell theory in predicting the thermal expansivity of glasses at low temperatures. An examination of experimental results for some inorganic and organic glasses indicates the existence of the three temperature regions, or at least the last two.

The second paper, entitled "Theory of Thermoelastic Properties for Polymer Glasses," develops a unified treatment for static compressional and elongational properties at temperatures up to glass-transition temperatures. It derives equations for the extensional elastic moduli as functions of temperature and pressure by a generalization of the equation of state.

Whereas the previous paper confined itself to the low-temperature region, where the characteristic free-volume function is effectively frozen, this paper proceeds to higher temperatures, where the temperature and pressure dependence of this function play a decisive role. The static Young's and shear modulus and the Poisson ratio are computed, based solely on information derived from the equation of state. This is illustrated by applications to poly(vinyl acetate) glasses at low and elevated pressures and for different formation histories. Further comparisons with experimental results are presented for poly(methyl methacrylate).

This work was done by Robert Simha and Elisabeth Papazoglou of Case Western Reserve University for **NASA's Jet Propulsion Laboratory**. *"Elastic Constants of Disordered Solids II: Temperature Dependence," and "Theory of Thermoelastic Properties for Polymer Glasses."*
NPO-17762/TN

FOR ADDITIONAL INFORMATION: *Contact: Director, Technology Transfer Division, P.O. Box 8757, BWI Airport, MD 21240; (301) 621-0100 Ext. 241*
REFER TO THE NUMBER LISTED AT THE END OF THIS ARTICLE

U.S. Army Research

U.S. Army Natick RD&E Center, Natick, MA 01760

Electrostatic Measurement of Materials Containing Conductive Fibers

Materials containing conductive fibers are being used by the Army for wear in eletrostatic sensitive operations, such as fuel handling. The presence of conductive fibers increases the electrical conductivity of the fabric, providing more desirable electrostatic properties. These fibers provide more permanent protection than antistatic finishes, which wash away after repeated launderings, but there was previously no reliable method for measuring their performance.

The current test method for measuring surface resistivity yields erratic results when conductive fibers are present in a fabric. New test equipment has been designed and built, and a test method developed, under the Small Business Innovation Research program.

To test the effectiveness of fabrics containing conductive fibers using this test method, the Static Decay Rate is determined. Static Decay Rate is a measure of the length of time it takes for the fabric to dissipate its charge, and is applicable to all fabrics. The test method involves mounting a sample across a set of parallel electrodes and charging towards 5000 volts for a period of twenty seconds. Upon completion of the charging period, the sample of grounded and the resulting voltage behavior, an exponential decay curve, recorded. From this curve, the decay time can be measured. The shorter the decay time is, the faster the fabric will dissipate its charge and the safer it will be in electrostatic sensitive environments.

For additional information, contact:

Ms. Michelle Sutphin
U.S. Army Natick RD&E Center
Natick, MA 01760-5471
TEL: 508-651-5471

or

Mr. Robert Rosenkrans
Technology Transfer Coordinator
U.S. Army Natick RD&E Center
Natick, MA 01760-5014
TEL: 508-651-5296

Department of Energy

Technology Application

Idaho National Engineering Laboratory

Analytical Instrumentation Method for Inert Gases in Alloy Powders

This system is a method of measuring amounts of inert gases (argon and helium) trapped in alloy powders during atomization and consolidation. When consolidated, powders of superalloys exhibit good homogeneity and strength and are used in critical components in aircraft jet engines. The structural integrity of the finished powder metallurgy components is directly related to the character of the powders. This system has made it possible to address influences of processing parameters upon the amount of inert gas trapped within powders and retained during consolidation. As a result, improved quality and integrity of alloy components is possible. This product has permitted substantial characterization of atomized powders, and these studies have proven the stability of the inert gases within powders and shown correlations between gas content and particle size, porosity and processing parameters.

This system improves existing technology because it is smaller, more portable, and capable of measuring both helium and argon and is developed from readily available equipment. This process may be used for products processed in protective environments whereby the gases may be entrapped and possibly influence properties. Potential processing methods include spray forming, plasma spraying, sputter deposition.

FOR ADDITIONAL INFORMATION: Contact Jack G. Peterson, Idaho National Engineering Laboratory, P.O. Box 1625, Idaho Falls, Idaho 83415; (208)526-2893. Refer to DOE/INEL-050TN.

NASA Tech Brief
National Aeronautics and Space Administration
NASA's Jet Propulsion Laboratory, Pasadena, California

Accelerated Testing of Photothermal Degradation of Polymers

Arrhenius plots reveal maximum safe temperatures.

Electron-spin-resonance (ESR) spectroscopy and Arrhenius plots can be used to determine the maximum safe temperature for accelerated testing of photothermal degradation of polymers. Aging can be accelerated by increasing the illumination, the temperature, or both. The results of aging tests at temperatures higher than those encountered in normal use are valid as long as the mechanism of degradation is the same throughout the range of temperatures. A transition between different mechanisms at some temperature can be identified via a transition between activation energies, which manifests itself as a change in the slope of an Arrhenius plot at that temperature.

The photothermal degradation of a polymer involves the photogeneration of free radicals, which decay through recombination and cross-linking of polymer chains. The kinetics of formation and decay of free radicals can be monitored by ESR. Specifically, the polymer is illuminated with a pulse of light, after which the ESR signal decays. The kinetic parameter, *k*, is inversely proportional to the characteristic decay time of the ESR signal.

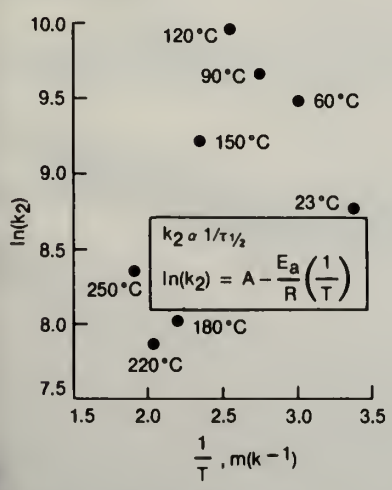

Figure 2. This **Arrhenius Plot** is obtained from the data of Figure 1. The abrupt change in slope at 120°C indicates a transition between different mechanisms of degradation.

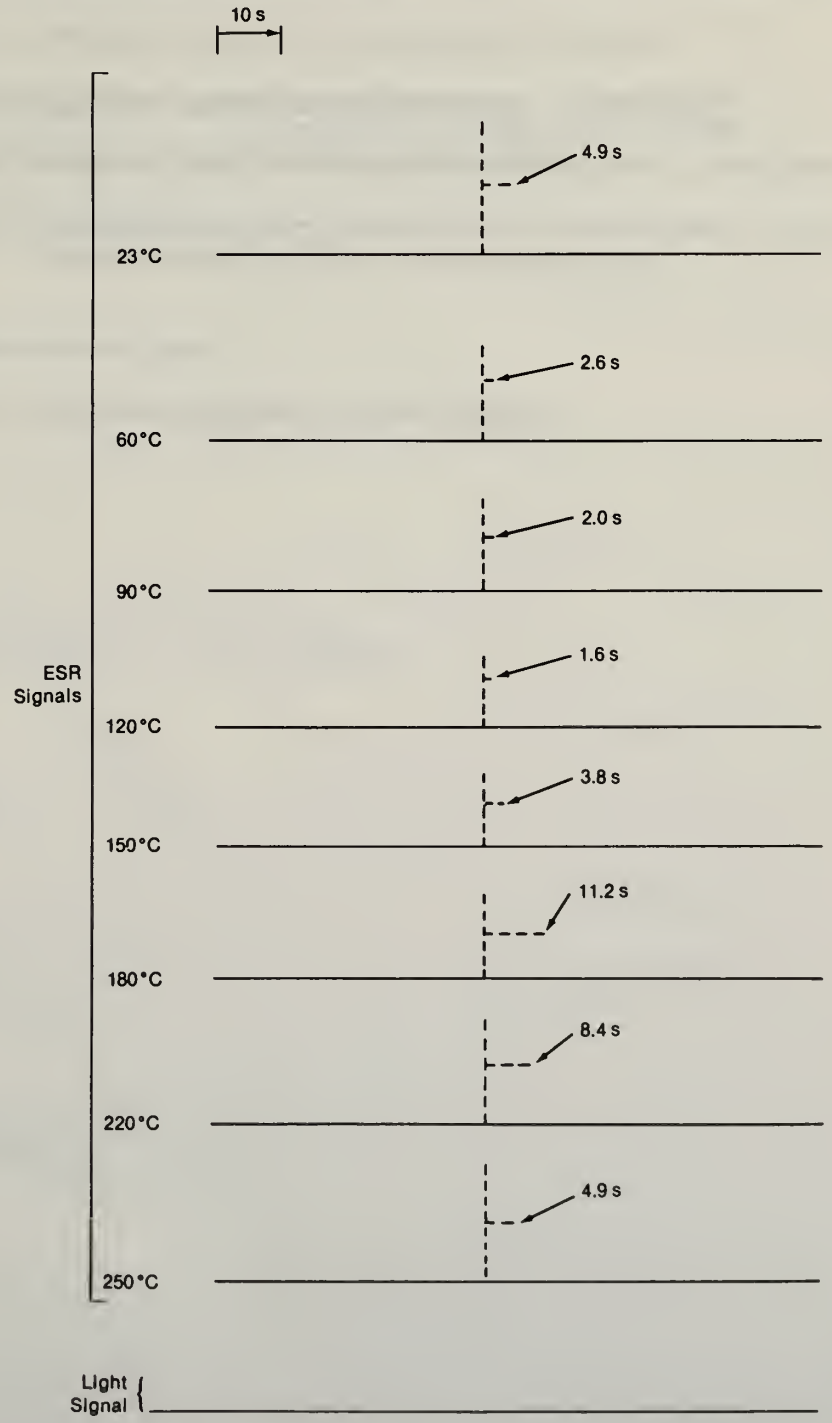

Figure 1. The **Concentration of Photogenerated Free Radicals** in Kapton® polyimide is shown by ESR traces, which rise during a pulse of illumination, then decay. The time indicated next to each decaying signal is the characteristic decay half life, $\tau_{1/2}$.

The kinetic parameter of a given polymer is calculated from ESR measurements at several temperatures, then plotted versus the reciprocal of absolute temperature to fit the data to the Arrhenius equation

$$\ln(k) = A - E_a/RT$$

where A is a constant, E_a = the activation energy, R = the ideal-gas constant, and T = the absolute temperature. For example, Figure 1 shows ESR traces from photogenerated free radicals in Kapton® polyimide film at various temperatures, and Figure 2 shows the resulting Arrhenius plot of the second-order rate constant, k_2. The simple linear relationship of the Arrhenius plot breaks off as the temperature rises above 120 °C. Thus, one can safely study photothermal degradation by accelerated aging of this material at temperatures up to 120 °C.

This work was done by Soon Sam Kim, Ranty Hing Liang, and Fun-Dow Tsay of Caltech for **NASA's Jet Propulsion Laboratory.**
NPO-17454/TN

FOR ADDITIONAL INFORMATION: *Contact: Director, Technology Transfer Division, P.O. Box 8757, BWI Airport, MD 21240; (301) 621-0100 Ext. 241*
REFER TO THE NUMBER LISTED AT THE END OF THIS ARTICLE

Medicine & Biology

0288 New Application of an Ion-Exchange Membrane

0289 Diagnostic Research and Clinical Laboratory Program

0290 Genetic Data Base Service

0291 Effectively Designing Computerized Work Stations

0292 Laboratory Animal Diagnostic Resource

0293 National Vibrating Probe Facility Offers Ion-Specific Vibrating Probe

0294 Controlled-Turbulence Bioreactors—Two versions provide conditions for growth and long life of cells. (Licensing Opportunity)

Other Items of Interest

0215 Underground Microbes Counter Chemicals

NIST Technology Update

National Institute of Standards & Technology
(Formerly the National Bureau of Standards)
U.S. Department of Commerce, Gaithersburg, MD 20899

New Application of an Ion-Exchange Membrane

Efficient methods to separate and purify bioproducts are an important factor in a commercially successful biotechnology. One attractive, low-energy approach to bioseparation is membrane-based separation. In a recent paper, NIST researchers report on the successful use of perfluorosulfonic acid (PFSA) membranes for isolating amino acids - used in produces from food additives to pharmaceuticals - from aqueous solutions. "We have cast a thin PFSA film on a porous support and obtained greatly increased fluxes of amino acids. In addition, the composite membrane exhibited good mechanical strength because of the support film," they report. Further research is needed before PFSA can be used commercially.

FOR ADDITIONAL INFORMATION: For a copy of the paper, contact Jo Emery, NIST, Division 104, Boulder, Colo. 80303; (303)497-3237. Ask for paper no. 50-89.

Diagnostic Research and Clinical Laboratory Program

Principal Investigator:
Dennis M. Stark, D.V.M., Ph.D.
Laboratory Animal Research Center
Box 2, Rockefeller University
1230 York Avenue
New York, New York 10021
(212) 570-8535

Resources Provided

- *Diagnostic Services:* This laboratory, in consort with Cornell University Medical College, Sloan-Kettering Institute, and the Animal Medical Center, provides a complete laboratory animal diagnostic program. The Rockefeller University laboratory is specifically staffed to provide expertise in microbiology, serology, virus isolation, pathology, and parasitology. The laboratory primarily serves the grantee and affiliated institutions. Collaborative diagnostic and research programs related to laboratory animal science are encouraged with other institutions.
- *Contact Person:* Dennis M. Stark, D.V.M., Ph.D., (212) 570-8535.

Research Emphasis or Application

- *Basic Objectives:* To provide diagnostic services, prospective and retrospective research studies in conjunction with disease screening, sanitization, and diagnostics at Rockefeller University.
- *Current Research:* Development of rapid immunodiagnostic assays, biology of thymic necrosis virus, macrophage biology, respiratory pathology of Sendai virus, biomedicine of the WHHL rabbit, and clinical case reviews.

NIH
Research & Technology
U.S. Department of Health and Human Services Public Health Service National Institutes of Health

Genetic Data Base Service

The Genetic Sequence Data Bank (GenBank) is chartered to provide a computer data base of all known DNA and RNA sequences and related biological and bibliographic information. According to Dr. Jane Peterson, program administrator of the Genetics Program, the National Institute of General Medical Sciences (NIGMS), which sets priorities and scientific policies for GenBank, the data bank is an ideal starting point for a number of molecular biology-related research projects.

"GenBank is designed to be the primary resource for anyone sequencing a particular gene or segment of DNA or comparing sequencing data to previously sequenced genes," she says.

GenBank is funded under a contract by the NIGMS with IntelliGenetics, Inc. of Mountain View, California, and is cosponsored by the National Library of Medicine and the Department of Energy. The data base is managed and updated by researchers at Los Alamos National Laboratory in Los Alamos, New Mexico. GenBank staff at IntelliGenetics distributes information contained in GenBank and develops computer software and systems to make it accessible to users. The data base currently contains approximately 30 million nucleotides, the building blocks of DNA and RNA, in approximately 26,000 different entries in biological material and organisms ranging from viruses to humans.

Most of the entries in GenBank are accompanied by annotations that include bibliographic information and origin of a particular nucleotide sequence: which organism, tissue, or cell it was taken from; which regions of the genome it is mapped to; and its location relative to neighboring known sequences. In addition, most of the sequence entries contain annotations covering the functional role of gene segments such as protein coding regions.

Data are most efficiently retrieved by software that can recognize and manipulate the entries. Some software can compare a query sequence with entries in the data bank and indicate all the similar sequences in the data library. For more ambiguous searches software is available that can retrieve sequences and other information based on annotations.

The almost explosive development of gene sequencing technology in recent years has generated an enormous number of nucleotide sequences. Dr. Christian Burks, coprincipal investigator for GenBank and a staff member in the theoretical biology and biophysics group at Los Alamos National Laboratory (LANL), says that many scientific journals are receiving so many sequence data that they are becoming reluctant to publish all of them. As a result, GenBank recently began encouraging authors to submit data directly to the data bank prior to or in conjunction with submission of their papers for publication.

"This allows journals to focus

Dr. Christian Burks evaluates an entry in the Genetic Sequence Data Bank—GenBank.

Bill Jack Rodgers, Los Alamos National Laboratory

on scientific discussion, which is their real purpose, while GenBank focuses on presenting the data in a form that the scientific community can easily access and analyze," Dr. Burks explains.

The direct submission of nucleotide sequence data has dramatically reduced the lag time for their appearance in GenBank, Dr. Burks says. Because nonannotated data are of limited value to GenBank users, GenBank tries to provide each sequence with a minimal amount of annotation such as journal citation and biological origin of the sequence.

"We have recently launched a novel program in which we are calling upon experts in various biological fields to act as curators of many of the new entries that pertain to their area of research. By encouraging scientists who use the data to help us manage them, we hope to expand our capabilities. The plan is to add as many as 15 curators to the program in the next 3 years," he says.

To simplify the entry of nucleotide sequences, GenBank has recently developed a software program called AUTHORIN. The software is designed to assist researchers in creating a complete data base entry while checking for consistency as each entry is made. The entries are saved on a floppy disk that can be sent electronically or mailed to GenBank where it is read and processed directly by a computer. The GenBank staff also is exploring ways to build more flexibility and sophistication into the data bank. Dr. Burks explains that by switching from the present flat-file system to a relational data base management system (RDBMS), future users will have more options for joining and relating items to one another.

"With our present flat-file system we have to write new software to accommodate new types of questions. The RDBMS will allow the system to answer almost any query that corresponds to the items in the data base. It's simply a matter of phrasing the questions correctly in the query language that comes with the system," he says.

The RDBMS will also make it easier for GenBank users to automatically link up with other data banks, Dr. Burks says. Data banks such as the NIH Repository of Human DNA Probes and Libraries, the Human Retrovirus and AIDS Data Base, the Protein Identification Resource, and the Human Gene Mapping Library all have information related to but not identical to that in GenBank. A cross-referencing system has already been established with the Human Gene Mapping Library, allowing GenBank users to identify and compare human genes that have been sequenced with genes that have been mapped, Dr. Burks notes.

GenBank releases, which contain the most current GenBank nucleotide sequence files and include updates from the European Molecular Biology Laboratory and the DNA Data Bank of Japan, are produced four times a year (March, June, September, December) and released in several different forms.

For mainframe computers releases are produced on nine-track magnetic tape reels, on cartridges compatible with the DEC TK-50 tape drive, and on cartridges using the SUN 1/4-inch QIC 24 format. For personal computer users the data base is available on floppy disks that can be read by IBM or IBM-compatible computers. For Macintosh personal computers the data bank releases are available on microdisks.

The charge for diskettes and magnetic tapes is based on the cost of material and the amount of information contained in the release. The average price currently is $150 to $200.

GenBank tentatively plans to make releases available on compact disks by December 1989.

A 24-hour online service is available through the Telenet or BIONET communication networks. Ten-minute sessions are available at no charge. To gain access to GenBank online a researcher needs only a modem and communications software. For a fee users may request individual online accounts that offer access to additional searching and alignment programs, bulletin boards, and electronic mail. An online user's manual that describes the procedures for accessing GenBank via the communication networks has recently been made available.

For further information about GenBank releases, access to GenBank online, or GenBank-related software contact:
IntelliGenetics Inc.
700 East El Camino Real
Mountain View, California
94050
Telephone: (415) 962-7364
E-mail: genbank
@genbank.bio.net

For information about data entry into GenBank contact:
GenBank
Theoretical Biology and
Biophysics Group
Los Alamos National Laboratory
Los Alamos, New Mexico 87545
Telephone: (505) 665-2177
E-mail: gb-sub %life @lanl.gov

NIST Technology Update

National Institute of Standards & Technology
(Formerly the National Bureau of Standards)
U.S. Department of Commerce, Gaithersburg, MD 20899

Effectively Designing Computerized Work Stations

The computerized work station often is considered the key to increased office productivity. Yet, work station furnishings and layout seldom are given the same attention and resources as the technology. Instead, space and furniture decisions too often are based on "status" and tradition. To help managers make intelligent choices, researchers in the NIST Center for Building Technology have developed a process for designing work stations based on office activities including reading and writing, talking on the telephone, drafting and drawing, or using a video display terminal. Work station dimensions and configurations then are developed depending on the importance of the activity and the time spent on it.

FOR ADDITIONAL INFORMATION: A publication describing this process, *Guideline for Work Station Design* (NISTIR 89-4163), is available by sending a self-addressed mailing label to Arthur Rubin, NIST, A309 Building Research Bldg, Gaithersburg, Md. 20899.

Laboratory Animal Diagnostic Resource

Principal Investigator:
C. Max Lang, D.V.M.
Milton S. Hershey Medical Center
Pennsylvania State University
P. O. Box 850
Hershey, Pennsylvania 17033
(717) 531-8462

Resources Provided

- *Diagnostic Services:* This laboratory is staffed to provide general competence in gross and microscopic pathology, microbiology, virology, immunology, parasitology, clinical chemistry, and hematology. Diagnostic resources are designed primarily to serve the grantee and affiliated institutions. However, with approval by the principal investigator, they are available for collaboration in investigating laboratory animal disease problems.
- *Contact Person:* C. Max Lang, D.V.M., (717) 531-8462.

Research Emphasis or Application

- *Basic Objectives:* To maintain the quality of research animals through control and diagnosis of diseases within the Animal Resource Facility of Pennsylvania State University. To recognize and define abnormal physiologic conditions and comparative diseases that may be of interest to biomedical researchers.
- *Current Research:* Effects of acidified water on immunosuppressed animals; the guinea pig as an animal model for pregnancy toxemia; environmental effects of hepatic microsomal enzymes; role of Kilham rat virus in respiratory disease.

NIH
Research & Technology
U.S. Department of Health and Human Services Public Health Service National Institutes of Health

Federal Laboratory Resource

National Vibrating Probe Facility Offers Ion-Specific Vibrating Probe

Scientists at the National Vibrating Probe Facility at the Marine Biological Laboratory (MBL) in Woods Hole, Massachusetts, have recently developed a calcium-specific vibrating probe that allows researchers to directly study the minute calcium gradients produced by the flow of calcium ions into and out of living cells. Calcium ions are important in many biological processes such as cell growth and development, muscle contraction, nerve function, and bone development, the researchers say.

Dr. Lionel F. Jaffe, director of the National Vibrating Probe Facility, which is supported by the Biomedical Research Technology Program of the NIH Division of Research Resources, suggests that ion-specific probes such as the calcium probe offer researchers many advantages compared to the conventional (platinum) vibrating probes the facility also uses.

"The platinum probes detect an electrical field caused by the flow of a mixture of ions. Ion-specific probes, on the other hand, allow us to dissect an electrical field into its individual ion currents," Dr. Jaffe says.

A platinum vibrating probe measures weak electric fields within a few millimeters of living cells or multicellular systems by vibrating at a high frequency (about 400 cycles per second). The rapidly vibrating platinum electrode, in effect, converts the low frequency electric field near the cell into a higher frequency signal that can be measured with great accuracy. However, only by tediously manipulating the ionic composition of the surrounding media until the electric field is altered can researchers deduce which particular ion is responsible for generating the field.

In contrast, an ion-specific probe such as the calcium probe, which contains a detecting fluid instead of a platinum wire, measures the concentration of a particular ion. In practice, the probe operates by vibrating slowly (about 1 cycle per second) between two points about 10 microns apart. A transducer converts the difference in concentration of ions between the two points, which may be as small as one-tenth of one percent, into a voltage difference. The voltage difference is then used to calculate an ionic current (flux).

Information about ion fluxes can tell researchers where certain "leaks" and "pumps" in cell membranes are distributed, Dr. Jaffe explains. These leaks and pumps appear to be controlled by protein structures embedded in cell membranes and may be responsible for directing the flow of macro-molecules to a particular site on a cell membrane, he says.

For example, when the Woods Hole researchers used a platinum probe to study fucoid (common seaweed) eggs, they found that a steady electrical current of a few tenths of a microampere per square centimeter flowed into a particular site of the egg several hours before the onset of growth at that site. The current continued to flow into the site during growth and stopped when growth ceased. Manipulation of the surrounding media indicated that a calcium ion leak was responsible for the growth current. Moreover, when the researchers created an artificial calcium leak in another fucoid egg, an outgrowth appeared at the site of the leak.

Through a process called "lateral electrophoresis," cells may leak or pump ions in order to segregate macromolecules on the basis of their overall electrical charge, Dr. Jaffe says. He suggests that different stages of growth of an egg or embryo, which may require different types of macromolecules, may be directed by different sets of ionic leaks or pumps. Studies on Drosophila

(fruit fly) eggs support this idea. For example, at one particular stage of Drosophila egg growth, researchers detected sodium ions flowing into a particular pole. At a later stage of growth, chloride ions were detected flowing into the opposite pole.

Ion currents may also be responsible for directing macromolecules and cells to sites of tissue injuries in mammals and limb regeneration in amphibians, Dr. Jaffe says. He and his colleagues have measured relatively large electrical currents around the sites of cuts and amputations. Ion-driven electrical currents have also been implicated in the transport of material across surface epithelia and in cell motility as well as in neuromuscular function, he adds.

Not only can the calcium probe make detection of such ion-driven currents easier, Dr. Jaffe says, but it also insures that the currents being measured are not caused by outside disturbances.

"There are a significant number of cases in which the motion of the platinum probe appears to disturb the electrical currents near the surface of specimens. The calcium probe vibrates so slowly, however, that it could never cause a disturbance," he says. "In addition, because the tip is smaller it allows greater spatial resolution."

The calcium probe has already been used to confirm that calcium ions are responsible for the electrical currents streaming into fucoid eggs during growth. It has also been used to investigate other developing systems previously studied with the platinum probes, such as growing pollen tubes and snail embryos. Dr. Jaffe says he expects to begin using the calcium probe and other ion-specific probes soon on a wider variety of projects in collaboration with visiting researchers who use the facility.

"You name the system, and I expect ion-specific probes to be useful," he says.

Staff scientist Wiel Kuhtreiber recently used the calcium probe to study moving slime mold slugs, Dr. Jaffe says. There are also plans to use it to study growing nerve cones. In addition, preliminary experiments on developing a potassium-specific probe are encouraging, he adds.

Besides the new calcium-specific vibrating probe and three older platinum vibrating probes, the National Vibrating Probe Facility has three Zeiss IM-35 inverted microscopes connected to a video monitor for viewing samples. Other microscope optics are also available. Some electrode systems are cushioned by air tables and supplemented by equipment that can apply a fixed voltage across the sample and allow measurements with intracellular microelectrodes in addition to the vibrating probe measurements.

Researchers may use the facility free of charge. However, they are encouraged to use the facility any time other than summer months when the research population at the MBL increases substantially. Proposals for projects that require 4 weeks or more of laboratory study should be submitted several months in advance. Short-term requests can often be made by telephone a few weeks in advance. Research staff will teach users to operate the vibrating probe systems and a small work area is provided. Larger work areas can be rented from the MBL for specimen preparation and other needs.

For more information on the National Vibrating Probe Facility contact: Al Shipley, Marine Biological Laboratory, Woods Hole, Massachusetts 02543; Telephone: (508)548-3705 x271.

FOR ADDITIONAL INFORMATION: To locate information or professional contacts on this effort, contact: Research Resources Information Center, 1601 Research Boulevard, Rockville, MD 20850, (301)984-2870. Refer to volume XIII, No. 10/TN.

NASA Tech Brief
National Aeronautics and Space Administration
Lyndon B. Johnson Space Center, Houston, Texas

Licensing Opportunity

Controlled-Turbulence Bioreactors

Two versions provide conditions for growth and long life of cells.

Two versions of a bioreactor vessel provide steady supplies of oxygen and nutrients with little turbulence. They suspend cells in the environment they need for sustenance and growth, while inflicting less damage from agitation and bubbling than do propeller-stirred reactors. The gentle environments in the new reactors are well suited to delicate mammalian cells.

One of these reactors has kept human kidney cells alive for as long as 11 days. In this reactor, cells grow on carrier beads suspended in a liquid culture medium that fills a cylindrical housing (see Figure 1). A spinning filter is located on the axis. A set of rotating vanes stirs the liquid. The rotation of the filter and the flow of liquid keep the carrier beads in suspension, and the currents set up by the slowly moving vanes are gentle.

Oxygen- and nutrient-rich liquid enters the housing through valves on the outer cylindrical wall, passing through radial gaps between the filter, blade assembly, and end caps. Depleted liquid leaves through the spinning filter. A heating element wound on the outside wall of the vessel keeps the reactor at the desired temperature.

Several valves in the wall of the vessel provide for the venting of trapped air bubbles (which would cause unnecessary turbulence), draining the vessel, extracting samples, and adding cells. The valves seal flush with the interior wall to eliminate dead space and form a smooth surface, minimizing growth of unwanted bacteria.

Another version of the reactor creates even less turbulence. It does not include blades and supplies oxygen by diffusion through permeable tubing (see Figure 2). This version cultures mammalian cells to a density of 1.4×10^6 cells/cm^3 for as long as 15 days. The vessel, also a horizontal cylinder with end caps, is rotated by a motor. The speed is adjusted so that the rotating liquid medium suspends the cell-laden beads uniformly.

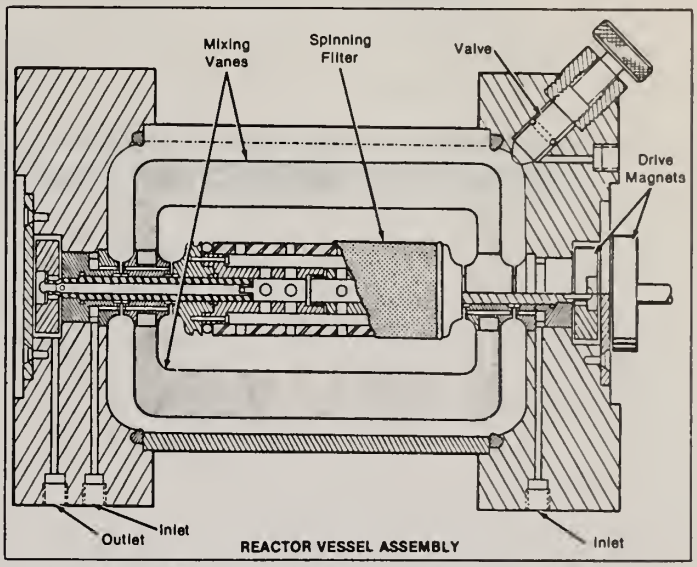

Figure 1. **Rotating Vanes** — Inside the vessel but outside the filter — gently circulate the nutrient medium. The vessel is stationary; a magnetic clutch drives the filter cylinder and the vanes.

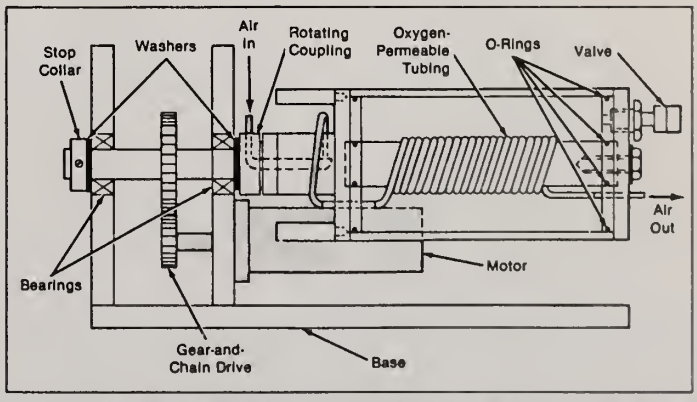

Figure 2. **Oxygen-Permeable Tubing** is wrapped around a rod extending along the central axis. A small external pump feeds oxygen to the tubing through a rotary coupling, and the oxygen diffuses into the liquid medium.

Lyndon B. Johnson Space Center
Technology Utilization Officer: Dean C. Glenn
Mail Code IC-4
Houston, TX 77058
(713) 483-3809
Patent Counsel: Edward K. Fein
Mail Code AL3
Houston, TX 77058
(713) 483-4871

This work was done by David A. Wolf of **Johnson Space Center**, *Ray Schwartz of Technology, Inc., and Tinh Trinh of Krug International.*

This invention is owned by NASA, and a patent application has been filed. Inquiries concerning nonexclusive or exclusive license for its commercial development should be addressed to the Patent Counsel, Johnson Space Center.

Refer to MSC-21293/21294

FOR ADDITIONAL INFORMATION: *Contact: Director, Technology Transfer Division, P.O. Box 8757, BWI Airport, MD 21240; (301) 621-0100 Ext. 241*

REFER TO THE NUMBER LISTED AT THE END OF THIS ARTICLE

Natural Resources Technology & Engineering

0295 Core Shows Scientific Value of Diamond Core Drilling

Testing & Instrumentation

0296 Measuring Winds With Pulsed C-Band Radar—The objective is to provide quick forecasts of impending thunderstorms. (Licensing Opportunity)

Core Shows Scientific Value of Diamond Core Drilling

The effectiveness of diamond core drilling for scientific and geothermal projects has been demonstrated by the recovery of more than 99 percent of core samples from a test hole more than a mile deep, Sandia National Laboratories scientists report.

Sandia's Geoscience Research Drilling Office, with funding from the Department of Energy, drilled the hole to a depth of 5,780 feet as a top-to-bottom study of minerals deposition in a hydrothermal system in northern New Mexico. Diameter of the hole at the bottom was 3 inches. Temperature at the bottom of the hole was 531 degrees Fahrenheit.

Peter Lysne, who with Ronald Jacobson directed the operation, says the operation marked the first time a scientific drilling project was completely diamond cored to that depth and temperature. Because the core was being collected continuously, researchers were able to make "real-time decisions" throughout the operation, Lysne said.

Taking core samples, or coring, is done for scientific purposes, minerals exploration, and hydrocarbons exploration and production. It is more important in scientific drilling and minerals exploration because such operations usually require closer examination of multiple formation. Hydrocarbon drilling uses coring on a more selective basis since the geological targets are limited.

Cores are collected in a tube within the hollow drill pipe. Diamond core drilling gets its name from the type of bit used - a hollow cylinder with embedded synthetic diamonds. The hole is made as the bit rotates, cutting and encapsulating the rock within the tube as the bit goes deeper into the earth.

Conventional rotary drilling, used in hydrocarbon exploration and production, is accomplished with a bit consisting of a series of meshing roller cones. Core is usually not taken with this method. When core is required, the core bit is usually large in diameter and entire string of drill pipe has to be removed to retrieve the core. With diamond core drilling, cost savings are achieved because the cores are collected in a tube that can be drawn through the drill pipe to the surface by a cable, or wireline, leaving the drill string in the well.

Diamond core drilling usually employes equipment lighter than that used in conventional rotary drilling. To prevent possible problems caused by high downhole temperatures and loose formation, the Sandia scientists contracted for a heavier Australian-built rig that is the largest commercially available wireline coring apparatus in the world.

Part of the six-year-old Continental Scientific Drilling Program, the project was proposed by principal investigators Jamie Gardner of Los Alamos National Laboratory and Jeffrey Hulen of the University of Utah Research Institute. They called for drilling completely through an active hydrothermal system in the Valles Caldera - a large crater in the Jemez Mountains west of Los Alamos, New Mexico. Sandia's role in the project was to drill the hole and collect the samples to enable the investigators to make their studies.

Gardner and Hulen were interested in learning more about how minerals are formed by hydrothermal convection. They also gathered information on how stresses occurring within the earth may have interacted to create fracture permeability - the crustal cracking that allows liquids and gases to move within a formation.

Total cost of the project was $1.61 million. It was completed under budget, on time, and free of typical geothermal drilling problems, Sandia scientists report. Use of the larger rig with diamond core bits allowed the researchers to recover 99.2 percent of core, Lysne says. The lost core was primarily from loose landslide material encountered during the first 50 meters of drilling.

Diamond cored holes are generally smaller in diameter than the holes drilled for oil and gas. This smaller diameter limits use of the larger-diameter, commercial logging tools used to make downhole measurements in the oil patch. This specific experiment only required the measurement of temperature, and drilling operations, needed directional surveys to assure the well was reasonably vertical.

"Advances in slim-hole logging technology are needed for downhole measurements before the full potential of diamond coring can be realized," Lysne comments. "Currently researchers often are faced with having to choose between excellent core recovery or downhole experimentation."

The proximity of drilling equipment and formation walls also complicates downhole fluid control since flows of drilling fluids and casing cement can be hindered by the narrow annuli, Lysne explains. "While diamond care drilling technology available in the United States is capable of making meaningful scientific holes under adverse conditions, these problems need additional resolution before one can be completely comfortable," he says.

Offsetting those deficiencies is the ability to examine the formation as the bit goes through it. "Through the research drilling in the Valles, we could make real-time decisions. All along we knew what we had," Lysne says.

FOR ADDITIONAL INFORMATION: Public Information Division, Code 3161, Department of Energy, Sandia National Laboratories, Albuquerque, NM 87185-5800; (505)844-4207. Refer to announcement 24, No. 8

NASA Tech Brief
National Aeronautics and Space Administration
John F. Kennedy Space Center, Florida

Licensing Opportunity

Measuring Winds With Pulsed C-Band Radar

The objective is to provide quick forecasts of impending thunderstorms.

Research has begun on the use of pulsed C-band radar in a multistatic configuration to measure winds in the absence of clouds. The ultimate objective of this effort is to develop the capability to use wind-measurement data to predict, as early and as accurately as possible, the formation of local thunderstorms — desirably, with lead times of several hours.

The proposed experimental system is based on the principle of multistatic radar: because a single radar can measure only the component of velocity along its line of sight by means of the longitudinal Doppler effect, multiple receivers will be tracked on the same point in the sky to measure the winds from different angles, thereby obtaining the complete wind vector at that point.

The proposed system (see figure) will include one radar station that both transmits and receives and one or more other stations that receive only. The advantage of the multistatic configuration is the greatly reduced effects of ground clutter on the receive-only stations. Each site will require a 5-MHz reference signal for coherent detection. This signal, modulated by the radar-pulse-triggering signal, will be sent from the transmitting/receiving station to the receiving (only) stations on a coaxial cable.

The raw data from each radar will be fed to a radar video processor, which computes radial velocities and can produce displays of velocities in five different intensities of blue and red, and reflectivities in 13 colors, in plan-position-indicator or range-height-indicator format. These plots can be obtained in real time or from data stored on tape. The velocity data from each such processor will be sent over a telephone line to a central computer, which will produce displays of windflows.

This work was done by Carl Lennon, Richard Wesenberg, Thomas O. Britt, Michael Brooks, Deloris Edwards, Chris Franklin, John Kiriazes, Brad Kitayama, and Jim Medina of **Kennedy Space Center.**

Inquiries concerning rights for the commercial use of this invention should be addressed to the Patent Counsel, Kennedy Space Center. Refer to KSC-11415/TN.

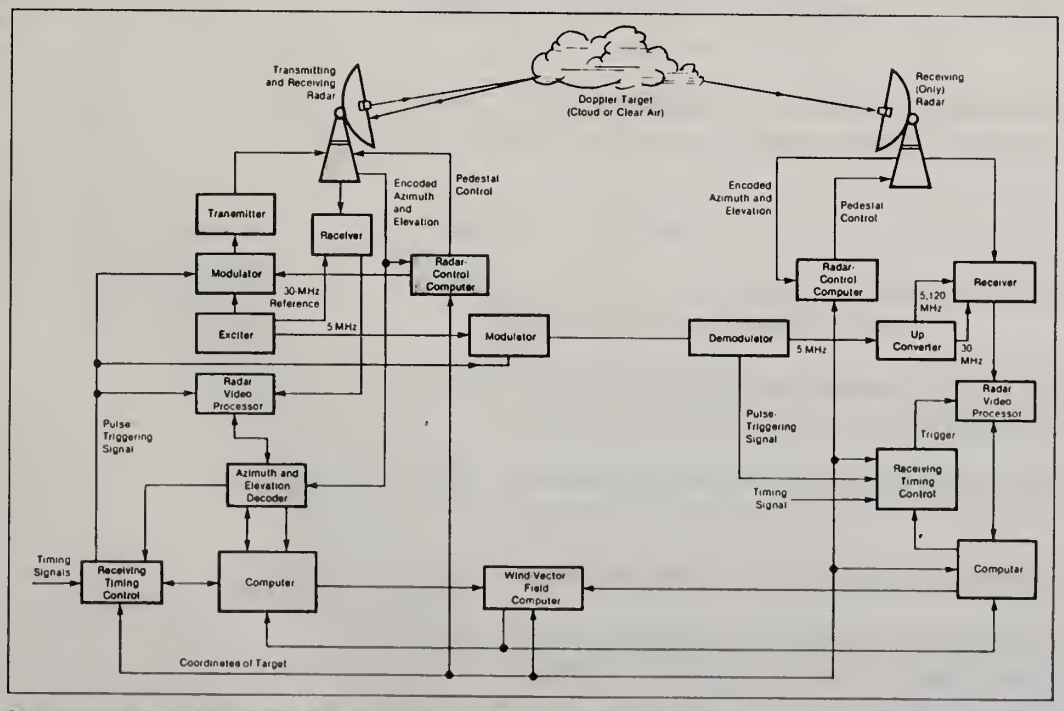

Simultaneous Messurements by Multiple Radars will be combined to produce wind-vector plots for the prediction of local thunderstorms.

John F. Kennedy Space Center
Technology Utilization Officer: Thomas M. Hammond
Mail Stop PT-PMO-A
Kennedy Space Center, FL 32899
(407) 867-3017
Patent Counsel: James O. Harrell
Mail Code PT-PAT
Kennedy Space Center, FL 32899
(407) 867-2544

FOR ADDITIONAL INFORMATION: *Contact: Director, Technology Transfer Division, P.O. Box 8757, BWI Airport, MD 21240; (301) 621-0100 Ext. 241*
REFER TO THE NUMBER LISTED AT THE END OF THIS ARTICLE

Physical Sciences

0297 Organotin Compounds (Licensing Opportunity)

0298 MIPROPS Program Now Available Online, Worldwide

0299 Compact Apparatus Grows Protein Crystals—A pair of syringes with ganged plungers produce crystals by hanging-drop method. (Licensing Opportunity)

0300 Making Excited Oxygen Molecules and Atoms—Excited oxygen should enable oxidation of semiconductors and superconductors at relatively low temperatures. (Licensing Opportunity)

0301 Q-Switch for Self-Injection Locking of Laser—The spectral width and pulse time would be regulated. (Licensing Opportunity)

Testing & Instrumentation

0302 Evaluation of HCl Continuous Emission Monitors

0303 Improved Oxygen Monitor for Use in a Radiation Environment

0304 Speckle-Suppression Apparatus—Multiple delays reduce speckle in an unmodulated laser pulse.

0305 High-Resolution, Two-Wavelength Pyrometer—Optical and electronic parts of a commercial instrument are modified.

Other Items of Interest

0237 Zero-Gravity Fuel-Cell Product-Water Accumulator—Water is removed from the fuel cell by capillary action.

0251 Effects of Turbulence on Ignition—The enhancement of evaporation by turbulence could be used to enhance ignition.

0286 Analytical Instrumentation Method for Inert Gases in Alloy Powders (Licensing Opportunity)

0288 New Application of an Ion-Exchange Membrane

0273 Polymeric Electrolytic Hygrometer for Harsh Environments—An improved design reduces vulnerability to organic vapors and dust.

U.S. Navy Fact Sheet

Licensing Opportunity

Organotin Compounds

Tributyltin analogues containing double bonds at C-1 or C-3 were synthesized for use as antifouling toxicants in marine antifouling coatings and other biocide applications. These compounds should be environmentally acceptable as they have increased degradation rates.

STAGE OF DEVELOPMENT

Compounds have been synthesized and have been successfully incorporated into a coating matrix. Resulting antifouling coating formulation needs optimization.

APPLICATIONS

These compounds can replace currently used organotin compounds in biocide and antifouling compositions.

PATENT STATUS

Navy case No. 71,163. Patent applied for.

PUBLICATIONS

C.A. Dooley and J.P. Testa, Jr. 1989 Stability and Microtox response of butenyltin compounds. Appl. Organomet. Chem. 3:171-176.

C.A. Dooley and J.P. Testa, Jr. 1989 Mass spectra of tetra-n-butenyltins and tri-n-butenyltin bromides. Org. Mass Spectrom. 24: 343-344.

C.A. Dooley and J.P. Testa, Jr. 1989 Synthesis and Mass spectra of butenyltin compounds. NOSC TR1272.

C.A. Dooley and P. Kenis 1987 Response of bioluminescent bacteria to alkyltin compounds. Oceans 87 4: 1517-1524.

FOR ADDITIONAL INFORMATION: C. A. Dooley, Code 522 B, Naval Ocean Systems Center, San Diego, CA 92152-5000; (619)553-2782.

NIST Technology Update

National Institute of Standards & Technology
(Formerly the National Bureau of Standards)
U.S. Department of Commerce, Gaithersburg, MD 20899

MIPROPS Program Now Available Online, Worldwide

A computer program for calculating the thermophysical properties of 12 important organic and inorganic industrial fluids, developed by NIST, now is available worldwide to subscribers of STN International (Scientific and Technical Network), an online private sector retrieval service. MIPROPS is designed for use in performing quick calculations on the properties of helium, argon, oxygen, nitrogen, hydrogen, and nitrogen trifluoride as well as the hydrocarbons, methane, ethane, ethylene, propane, isobutane, and normal butane. The new online program is based on NBS Standard Reference Database 12, *Interactive FORTRAN Programs to Calculate Thermophysical Properties of Fluids, MIPROPS, 1986.*

FOR ADDITIONAL INFORMATION: For information on the availability of MIPROPS through STN, or MIPROPS for lease on a computer-readable magnetic tape of floppy disk, contact the Office of Standard Reference Data, NIST, A323 Physics Bldg., Gaithersburg, MD. 20899; (301)975-2208.

NASA Tech Brief
National Aeronautics and Space Administration
Marshall Space Flight Center, Alabama

Licensing Opportunity

Compact Apparatus Grows Protein Crystals

A pair of syringes with ganged plungers produce crystals by hanging-drop method.

A laboratory apparatus provides a delicately balanced combination of materials and chemical conditions for the growth of protein crystals. Intended for use on Earth and in the low gravitation of outer space, the apparatus and the technique for growth are based on the hanging-drop method for the crystallization of macromolecules.

The apparatus (see figure) includes a pair of syringes with ganged plungers. One syringe contains the protein solution; the other contains a precipitating-agent solution. The syringes intrude into a cavity lined with a porous reservoir material (for example, ultra-high-molecular-weight polyethylene) that is saturated with 1 mL or more of a similar precipitating-agent solution. Prior to activation, the ends of the syringes are plugged to prevent the transport of water vapor among the three solutions.

At the moment of activation, the plug is withdrawn, and then the plungers are moved to extrude the protein and precipitating-agent solutions from the syringes. The solutions mix and adhere to the joined tips of the syringes, forming a drop of 30 to 80 μL, in which the concentration of precipitant is lower than that in the reservoir material. Water begins to evaporate slowly from the drop. The water vapor is transported to and absorbed in the reservoir solution. This slow evaporation and transport continues until vapor-pressure equilibrium is reached.

As the concentrations of the protein and precipitating agent in the drop increase during evaporation, crystallization begins. Crystallization can start either before or at equilibrium. Crystallization can be hastened by local concentrations due to imperfect mixing of the two solutions, by impurities that act as nucleation sites, by a seed crystal, or by roughness on one or more of the surfaces in contact with the drop.

At the end of the time allotted for growth, protein crystals are suspended in the drop of mixed solution. To begin deactivation, the plungers are withdrawn to pull the solution and crystals back into the syringes. The plug is once again pushed against the tips of the syringes, sealing the solution and crystals inside. The solution and crystals are removed subsequently for further experimentation.

An alternative version of the crystal-growing technique involves a similar procedure, except that crystallization depends on the change in acidity or alkalinity of the drop. In this case, a volatile acid or alkaline solute (e.g., acetic acid or ammonia) is evaporated and transported instead of water.

This work was done by Charles E. Bugg, Lawrence J. DeLucas, Fred L. Suddath, Robert S. Snyder, Blair J. Herren, Daniel C. Carter, and Vaughn H. Yost of the University of Alabama for **Marshall Space Flight Center**.

Inquiries concerning rights for the commercial use of this invention should be addressed to the Patent Counsel, Marshall Space Flight Center Refer to MFS-26088/TN

George C. Marshall Space Flight Center
Technology Utilization Officer: Ismail Akbay
Code AT01
Marshall Space Flight Center,
AL 35812
(205) 544-2223
Patent Counsel:
Leon D. Wofford, Jr.
Mail Code CC01
Marshall Space Flight Center,
AL 35812
(205) 544-0024

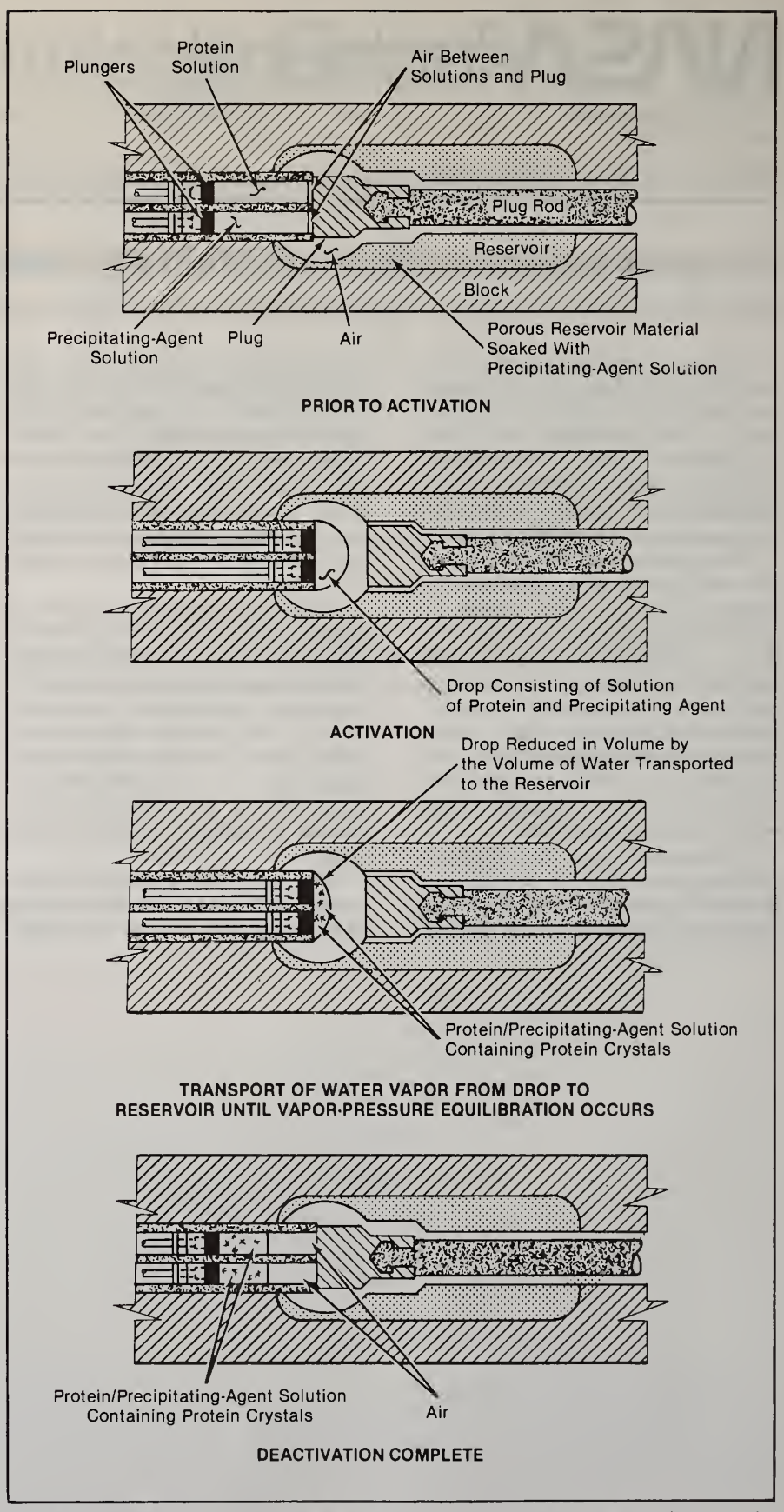

Crystals of Protein grow in a drop that adheres to the tips of the syringes. The drop containing the crystals is then withdrawn into the syringes.

FOR ADDITIONAL INFORMATION: *Contact: Director, Technology Transfer Division, P.O. Box 8757, BWI Airport, MD 21240; (301) 621-0100 Ext. 241*

REFER TO THE NUMBER LISTED AT THE END OF THIS ARTICLE

NASA Tech Brief
National Aeronautics and Space Administration

Licensing Opportunity

NASA's Jet Propulsion Laboratory, Pasadena, California

Making Excited Oxygen Molecules and Atoms

Excited oxygen should enable oxidation of semiconductors and superconductors at relatively low temperatures.

The oxidation of semiconductors and high-temperature superconductors could be achieved at lower temperatures than in current fabrication processes by use of oxygen molecules or atoms that have been raised into specific excited states. The use of excited oxygen (or other species) is also of interest in research on the kinetics and mechanisms of chemical reactions.

The use of excited species reduces the thermal energy required for oxidation. Such a gaseous oxidizing species would have negligible nonthermal kinetic energy, unlike the ion beams or plasmas used in typical low-temperature processing methods, in which substrates undergoing treatment are degraded by sputtering, mixing, and the like. Unlike oxidation induced by beams of ions, electrons, or photons, excited-gas oxidation should be suitable for processing specimens that have large areas.

During the past decade, chemists have developed techniques for the controlled generation of specific excited species of oxygen in useful quantities. These methods include irradiation of oxygen gas with low-energy (< 4-eV) electrons, microwave discharges, and irradiation by lasers tuned to the frequencies of specific transitions in the energy levels of molecules. The most-promising molecular species is the first excited state ($a^1\Delta_g$) of molecular oxygen, which can be produced by laser light. This level lies 0.98 eV above the ground state ($X^3\Sigma_g^-$) and has a radiative half-life of 45 minutes, which is shortened to 9 minutes by nonradiative collisional processes.

Because the direct optical excitation of this state involves a doubly forbidden transition, a two-step process is required. First, the molecule is optically excited to the second excited state ($b^1\Sigma_g^+$), which is 1.63 eV above the ground state. It then undergoes collisional relaxation to the first excited state.

A laser tuned to about 7,610 Å would irradiate oxygen either in the processing chamber or in a separate gas holding chamber. The use of a separate chamber, combined with a delay to allow collisional relaxation to the $a^1\Delta_g$ state, would ensure that a single excited species was reacting with the substrate. This technique should also be of interest in fundamental studies of oxidation. It could be used in an ultra-high-vacuum chamber that is also equipped for such surface-analytical techniques as x-ray photoelectron spectroscopy.

Another possibility would be to generate excited atomic species. Photons of energy greater than about 6 eV can excite oxygen from the ground state to the $B^3\Sigma_u^-$ state, creating two oxygen atoms in the ground ^3P state via a nonradiative transition. The 1,849-Å radiation from a mercury-arc lamp may be suitable. The oxygen pressure in the chamber should be kept below 10 torr (1.3 kPa) to suppress the formation of ozone. If ozone is desired, pressures greater than 0.5 atm (51 kPa) can be used. However, commercial ozone sources are available.

The dissociation of oxygen by photons of energy greater than about 7 eV results in one atom in the ground (^3P) state and one in the first excited (^1D) state. These two atomic species could also be obtained by the dissociation of ozone or N_2O.

This work was done by Richard P. Vasquez of Caltech for **NASA's Jet Propulsion Laboratory.**

This invention is owned by NASA, and a patent application has been filed. Inquiries concerning nonexclusive or exclusive license for its commercial development should be addressed to the Patent Counsel, NASA Resident Office-JPL. Refer to NPO-17534/TN.

Jet Propulsion Lab.
NASA Resident Office
Technology Utilization Officer: Gordon S. Chapman
Mail Stop 180-801
4800 Oak Grove Drive
Pasadena, CA 91109
(818) 354-4849
Patent Counsel: Paul F. McCaul
Mail Code 180-801
4800 Oak Grove Drive
Pasadena, CA 91109
(818) 354-2734
Technology Utilization Mgr. for JPL: Norman L. Chalfin
Mail Stop 156-211
4800 Oak Grove Drive
Pasadena, CA 91109
(818) 354-2240

FOR ADDITIONAL INFORMATION: *Contact: Director, Technology Transfer Division, P.O. Box 8757, BWI Airport, MD 21240; (301) 621-0100 Ext. 241*
REFER TO THE NUMBER LISTED AT THE END OF THIS ARTICLE

NASA Tech Brief
National Aeronautics and Space Administration
Langley Research Center, Hampton, Virginia

Licensing Opportunity

Q-Switch for Self-Injection Locking of Laser

The spectral width and pulse time would be regulated.

A proposed scheme for improved electro-optical switching (Q switching) of a pulsed, self-injection-locked laser involves the sensing of and compensation for the level of the pumping light. The scheme would decrease the spectral width of a laser pulse and make it independent of the pumping level, at least to first order. Such independence is desirable because the degree of spectral narrowing of the emitted radiation is heavily dependent on the level of the pumping light, which is usually highly variable. Because the time of evolution of the pulse also depends heavily on the pumping level, the proposed scheme would also be beneficial in reducing jitter.

As in other Q-switched, self-injection-locking schemes, the laser is operated in a high-loss condition during the initial evolution of the pulse. During this time, the light makes many round trips through the laser resonator. On each round trip, the spectrum-narrowing optical elements operate on the radiation in the pulse. An increase in the loss, and thus the number of round trips, decreases the spectral width of the pulse. Once a small laser pulse has evolved in a high-loss condition in the laser resonator, the optical configuration of the resonator is switched to one of low loss. In the low-loss state, the majority of the energy is extracted in an efficient manner while retaining the narrow spectral width of the initial pulse.

The problem is to control the moment of switching and/or the level of loss during the initial high-loss period. In the new scheme, the solution is to regulate the amount of loss during the initial high-loss period in response to the measured level of pumping in such a way that the time of evolution of the pulse and the number of round trips is maintained nearly constant from pulse to pulse.

As shown in the figure, a photodiode or other detector would be exposed to the fluorescence emitted by the laser medium. This fluorescence would be directly proportional to the population of the upper laser level and, thus, to the effective pumping level. A spectral filter could be used in front of the optical detector to reject the unwanted background radiation. The output of the detector would be amplified, typically by an amplifier that has a large voltage gain.

The output from the amplifier would be applied directly to an electro-optical Q-switch in addition to the main Q-switch-driving voltage to obtain a total Q-switch-driving voltage that varies the level of loss. To increase the accuracy of control, the amplified voltage could be applied in addition to a dc voltage. With this arrangement, the loss could be approximated by a linear relationship rather than a direct proportionality. If better regulation of loss were required, a nonlinear amplifier could be used.

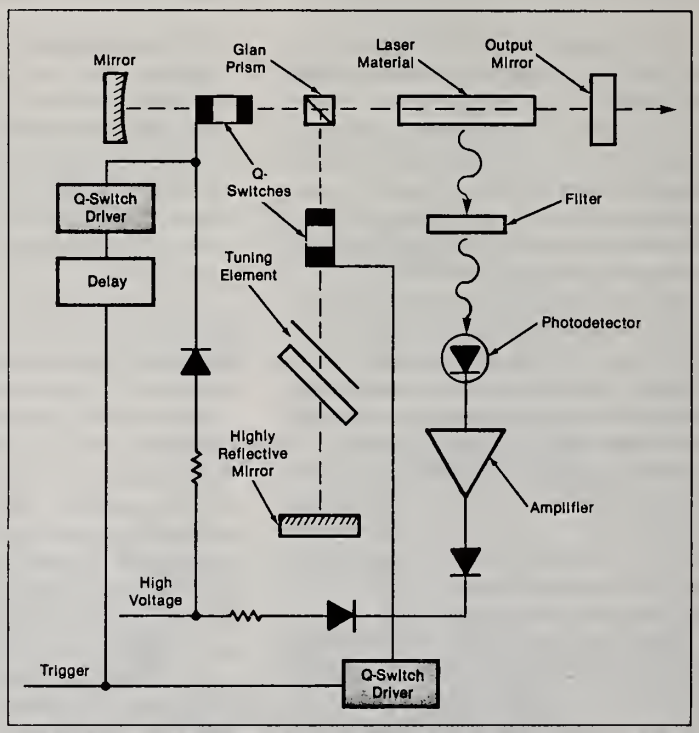

The **Amplified Output of the Photodetector** would be applied to the Q-switch to regulate the level of loss in response to the level of pumping light.

This work was done by Norman P. Barnes of **Langley Research Center.**

This invention is owned by NASA, and a patent application has been filed. Inquiries concerning nonexclusive or exclusive license for its commercial development should be addressed to the Patent Counsel, Langley Research Center. Refer to LAR-13772/TN.

Langley Research Ctr.
Technology Utilization Officer: John Samos
Mail Stop 139A
Hampton, VA 23665
(804) 864-2484
Patent Counsel:
George F. Helfrich
Mail Code 279
Hampton, VA 23665
(804) 864-3523

FOR ADDITIONAL INFORMATION: *Contact: Director, Technology Transfer Division, P.O. Box 8757, BWI Airport, MD 21240; (301) 621-0100 Ext. 241*
REFER TO THE NUMBER LISTED AT THE END OF THIS ARTICLE

United States
Environmental Protection
Agency

Atmospheric Research and
Exposure Assessment Laboratory
Research Triangle Park NC 27711

Research and Development

EPA

Project Summary

Evaluation of HCl Continuous Emission Monitors

Introduction

Certain U.S. Environmental Protection Agency (EPA) regulations (40 CFR 264, Subpart 0, Sections 264.340 - 264.351) suggest that hazardous waste incineration facilities must monitor HCl on a continuous basis to economically demonstrate continuous compliance with the HCl emissions requirement of Section 264.343(b). Already, California and certain northeastern states (e.g.,Connecticut, Massachusetts, New York, New Jersey, and Pennsylvania) already require operating permits for new or proposed refuse-fired boilers to include a provision that HCl continuous emission monitors (CEMs) be installed and operated to demonstrate HCl removal requirements when HCl CEM systems become commercially available. However, not yet documented are identification of the various types of commercially available HCl CEMs or the demonstration of their effectiveness in continuous monitoring effluent HCl emissions from hazardous waste incinerators or from refuse-fired boilers.

The Quality Assurance Division (QAD) of the Environmental Monitoring Systems Laboratory (EMSL), Research Triangle Park, North Carolina, is responsible for assessment of environmental monitoring technologies and systems. QAD has initiated a field test program to assess the performance of commercially available HCl CEMs. The major objectives of the project were (1) to evaluate the reliability of multiple HCl analyzers in terms of the accuracy, precision, and availability of measurement data, and (2) to determine the adequacy of sampling systems for reliably providing effluent samples to the various HCl analyzers.

The field evaluation was conducted at a municipal refuse-fired boiler with HCl effluent concentrations ranging, typically, between 200 and 500 ppm.

Test Procedures

The field evaluation utilized concurrent operations of the various analyzers and sampling systems to determine factors affecting the reliability of the equipment. Performance tests for relative accuracy, calibration drift, calibration error, and response time were conducted according to procedures outlined in "Gaseous Continuous Emission Monitoring Systems - Performance Specification Guidelines for SO_2, NO_2, CO_2, and TRS," EPA-450/3-82-026, October 1982. Manual sampling, using a wet-chemical impinger sampling train, was also conducted. To facilitate quantification of HCl sample line losses, flue gas sampling was conducted simultaneously at two locations - the duct and the CEMs' common manifold. The manifold distributed diluted flue gas absorbing reagent, 15 mL of 0.1 N NaOH, was added to each of the first two impingers. The reagent was used in the manifold impinger trains at 0.001 N NaOH because of the lower HCl content after dilution by the dilution probe. The third impinger (a Mae West design) was filled with calcium sulfate (Drierite) to protect the Singer dry gas meter from moisture. The desired sampling rate during the relative accuracy testing was 2 L/min with a sampling time of 20 min.

At the beginning of each test period, all CEMs were calibrated (at zero and one upscale calibration point) to the same standard. Triplicate sampling and analysis, using wet-chemical impinger sampling and mercuric-nitrate titrations, were conducted on the calibration gases to verify their concentrations. The three analyzers not supplied with a probe and sample conditioning/ handling system (i.e., the LSI, MDA, and CEA analyzers) were supplied gas samples from either the TECO or Compur dilution systems.

Results And Discussion

Operational problems were experienced at the startup of the analyzers and monitoring systems. The test personnel and equipment vendors spent the first few months of the field evaluation identifying and resolving problems affecting the reliability of HCl monitor operation.

The CEA Model TGA-410 HCl analyzer, initially provided for the field evaluation, did not respond to changes in sample concentration. CEA representatives suspected a bad electrochemical gas sensor within the analyzer and replaced the analyzer. However, the new

analyzer performed similarly to the one it replaced. As a result, CEA withdrew its analyzer from the evaluation.

Evaluation results, generally, indicate acceptable HCl CEM performance during the relative accuracy test periods. Wet-chemical impinger sampling was conducted to collect "reference" HCl concentration measurements to compare to the HCl monitoring measurements so that relative accuracy could be determined. The computations of relative accuracy were performed using the procedures in Performance Specification 2, 40 CFR 60, Appendix B. A relative accuracy specification of ≤ 20% was adopted for this evaluation. CEM wet-basis measurement data were corrected to dry-basis so that a direct comparison could be made to the dry-basis impinger results.

A seven-day calibration drift evaluation was not performed according to the procedures of promulgated Performance Specification 2. However, daily calibration checks were performed over 3- and 4-day periods according to the calibration drift test procedures. These test data were compiled to demonstrate the capabilities of these HCl analyzers to maintain daily drift within the 2.5% of span specification of Performance Specification 2 adopted for this evaluation.

The following observations can be made from the results:

- Most of the calibration error results exceeded the ≤ 5% specification adopted for this evaluation. All the CEM responses to the 503 ppm gas, except for one MDA response, were within ± 8% of the cylinder gas value. For comparison purposes, all the monitors produced responses to the 503 ppm gas injections that would meet the Appendix F, Procedure 1 acceptable accuracy requirement of ± 15% using the Cylinder Gas Audit (CGA) procedure. The CGA procedure requires three gas injections of each of two audit gases and specifies that the average of the three responses should be used in determining accuracy. Monitor imprecision is not accounted for because the confidence interval is not included in the Procedure 1 accuracy determination.
- Because the LSI and MDA analyzers were calibrated to the 503 ppm HCl calibration gas, the LSI and MDA results for the high-level check (1556 ppm) are excessive as a result of the nonlinearity associated with the measurement techniques of these two monitors.
- The magnitude of the confidence interval terms for some of the analyzers reflects a high degree of monitor imprecision during these tests. These analyzers had difficulty producing repeatable responses to the same calibration gas. This same problem also affected the daily calibration drift results.

Conclusions

The following conclusions are based on the results that were obtained from the project.

- Except for the CEA Model TGA-410, the HCl monitoring equipment produced effluent measurements in good agreement with concurrent wet-chemistry measurements for uncontrolled HCl emissions from a municipal waste combustion source.
- The TECO 200 and Compur sampling systems (which employ dilution probes), as well as the Bodenseewerk monitoring system (which uses a non-dilution, heat-traced sampling system) can reliably provide representative effluent samples to the analyzers. The relative accuracy results indicate that the effect of HCl line losses can be minimized by injecting the HCl calibration gases through the entire sampling system when performing the dynamic calibrations.
- For some of the analyzers, the calibration gas injections and the relative accuracy tests do not always provide the same indication of CEM performance.
- The relative accuracy test data do not indicate biases for any of the monitor measurement techniques because of analytical interferences present in the effluent of this municipal boiler.

Scott A. Shanklin, J. Ron Jernigan, and Scott C. Steinsberger are with Entropy Environmentalists, Inc., Research Triangle Park, NC 27709.
Roosevelt Rollins is the EPA Project Officer (see below).
The complete report, entitled "Evaluation of HCl Continuous Emission Monitors," (Order No. PB 89-161 863/AS; Cost: $21.95, subject to change) will be available only from:
National Technical Information Service
5285 Port Royal Road
Springfield, VA 22161
Telephone: 703-487-4650
The EPA Project Officer can be contacted at:
Atmospheric Research and Exposure Assessment Laboratory
U.S. Environmental Protection Agency
Research Triangle Park, NC 27711

Department of Energy

Technology Application

Fermi National Accelerator Laboratory

Improved Oxygen Monitor for Use in a Radiation Environment

A Fermilab-designed oxygen-monitory system is especially useful in areas where oxygen-monitoring problems associated with radiation are a factor. The monitor features four sensor channels, self-test capability with color coded trouble indicators to display the internal condition of the monitor, battery condition indication, keyed maintenance bypass of all alarms, and a dedicated FIRUS-88 port with alarm and trouble status.

In dealing with the radiation-environment problem, the designers did away with the electronics board associated with the cell in the oxygen sensor, which caused sensors to fail as often as every three days. That electronics board required calibration in place and adjustment of two potentiometers. Drifting of the sensor's calibration was frequent and required a return visit to the sensor in difficult and hazardous areas. Cell replacement in the new monitor is limited to a single trip to the cell location to disconnect the old cell and connect a new one. Calibration is done at the monitor chassis with a single potentiometer. If the cell changes its reading later, a quick recalibration at the chassis is done with no accesses to hazardous areas or disturbance of the physics program.

This new oxygen monitor should be useful in radiation areas with potential oxygen-deficiency hazards such as reactor facilities. This monitor also easily fits in industrial FIRUS-88 installations.

FOR ADDITIONAL INFORMATION: Office of Research and Technology Applications, Fermi National Accelerator Laboratory, P.O. Box 500 MS 208, Batavia, IL 60510. Refer to FAA-556/TN.

NASA Tech Brief
National Aeronautics and
Space Administration
Langley Research Center, Hampton, Virginia

Speckle-Suppression Apparatus

Multiple delays reduce speckle in an unmodulated laser pulse.

A technique and apparatus have been developed to reduce speckle in unmodulated laser pulses, using a reduced number of optical fibers. The technique is expected to decrease the costs of bundles of optical fibers used to transmit unmodulated laser pulses.

Speckle can result from the interaction of spectrally narrow laser light with a reflecting or diffusing surface. This interaction causes a random-intensity distribution of light in the laser pulse that produces a granular, or speckled, pattern of light and dark spots when the pulse is reflected from a diffusing surface.

The new apparatus reduces speckle in an optically transmitted, unmodulated laser input pulse by introducing a number of independent delays into the pulse. The number of delays is equal to the shorter of the coherence length of the laser pulse source or the duration of the delayed laser output pulse. The reduction in the noise or variance generated by speckle is a function of the number of independent delays. The apparatus could include a number of optical fibers of different optical lengths, a single optical fiber in combination with one or more beam splitters, or a single circulator capable of generating a succession of delayed independent laser output pulses from a single laser input pulse.

The preferred configuration is illustrated in the figure. It includes a laser, which provides an initial unmodulated laser input pulse of known coherence length L_C. The pulse passes through a suitable diffuser or integrating sphere into a number of optical fibers of optical lengths L_O, $2L_O$, $3L_O$, and $4L_O$. The optical length L_O is chosen so that the optical fibers provide a series of four independent and delayed laser output pulses of equal duration. The delays between the pulses put out by the fibers may vary. All may equal or exceed the shorter of the coherence length L_C of the laser or the length L_P of the pulse.

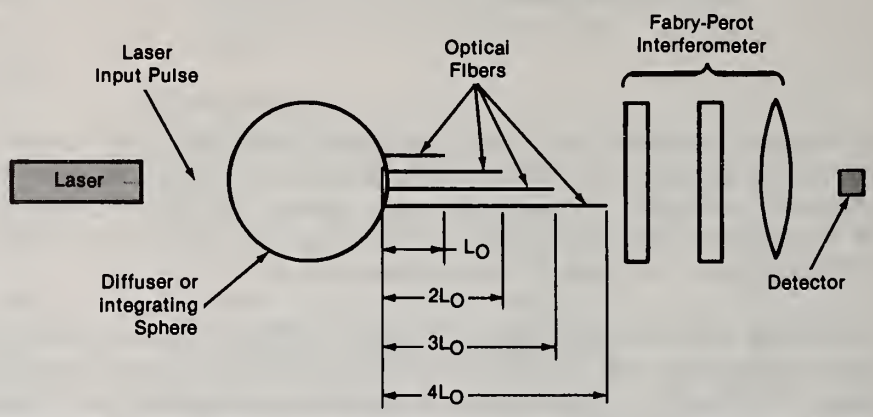

Optical Fibers of Different Length scramble the relative phases of the succession of laser output pulses.

The independent laser output pulses are transmitted through a conventional Fabry-Perot interferometer to a detector, where they are combined or added. Because the delays in the fibers scramble the phases of the output pulses, any noise or variance in the laser input pulse caused by speckle is reduced proportionally to the square root of the number of delays.

This work was done by Israel Taback of the Bionetics Corp. for **Langley Research Center.**
LAR-13771/TN

FOR ADDITIONAL INFORMATION: *Contact: Director, Technology Transfer Division, P.O. Box 8757, BWI Airport, MD 21240; (301) 621-0100 Ext. 241*
REFER TO THE NUMBER LISTED AT THE END OF THIS ARTICLE

NASA Tech Brief
National Aeronautics and Space Administration
NASA's Jet Propulsion Laboratory, Pasadena, California

Licensing Opportunity

High-Resolution, Two-Wavelength Pyrometer

Optical and electronic parts of a commercial instrument are modified.

A modified two-color pyrometer measures the temperatures of objects with high spatial resolution. Like other two-color pyrometers, it determines the temperature by calculating the ratio of the intensity of radiation received in two different wavelength bands. Because the instrument uses a ratio, its accuracy is less sensitive to the intensity of radiation falling on its detectors than is that of a pyrometer that measures in one wavelength band only.

A conventional two-color pyrometer can resolve a target that subtends an angle of about 1/100 rad, but the modified pyrometer can resolve a target only 1/800 rad wide. Designed to measure the temperatures of objects in crystal-growing furnaces, the modified pyrometer has a dynamic range of 1,100 to 1,600 °C and a sensitivity of 5 mV/°C.

In a conventional two-color pyrometer, the image of the target is focused on the planar end of a bundle of optical fibers for transmission to the detectors. In the modified instrument, the image is focused on a hole 0.002 in. (0.05 mm) in diameter in a brass sheet near the end of the bundle, causing the image to be distributed so that the fibers are covered by defocused radiation from the target (see figure). The pinhole ensures that radiation from only a small part of the target scene reaches the detector, thus providing the required spatial resolution. Moreover, by spreading the radiation over the bundle, the pinhole ensures that the entire active area of the detectors is utilized.

In the first version of the instrument, using the modified optics with the commercial signal-processing electronics, the signal output of the detectors was too low to drive the signal-processing circuitry. The fixed logarithmic gain characteristic of that circuitry responded to low input signals with low gain, yielding a poor signal-to-noise ratio.

Accordingly, an entirely-new signal-processing package was designed and installed. It uses high-gain, high-stability, chopper-stabilized operational amplifiers. It also uses resistive feedback, which gives a higher signal-to-noise ratio than does logarithmic feedback. As a result, the modified pyrometer produces a signal as quiet as that of conventional instruments but with only 1/64 the input radiation.

Each of the two channels from the detector — one for each color — feeds two stages of chopper-stabilized amplification. The stages consist of linear current-to-voltage converters and preamplifiers. The preamplified signals are connected through shielded cables to scaling amplifiers and a linear divider circuit. After filtering, the output of the divider goes to a panel meter and to a pair of output terminals. The output of the divider is calibrated internally by a pair of voltages fed to the input of the divider to simulate a known input from the detectors.

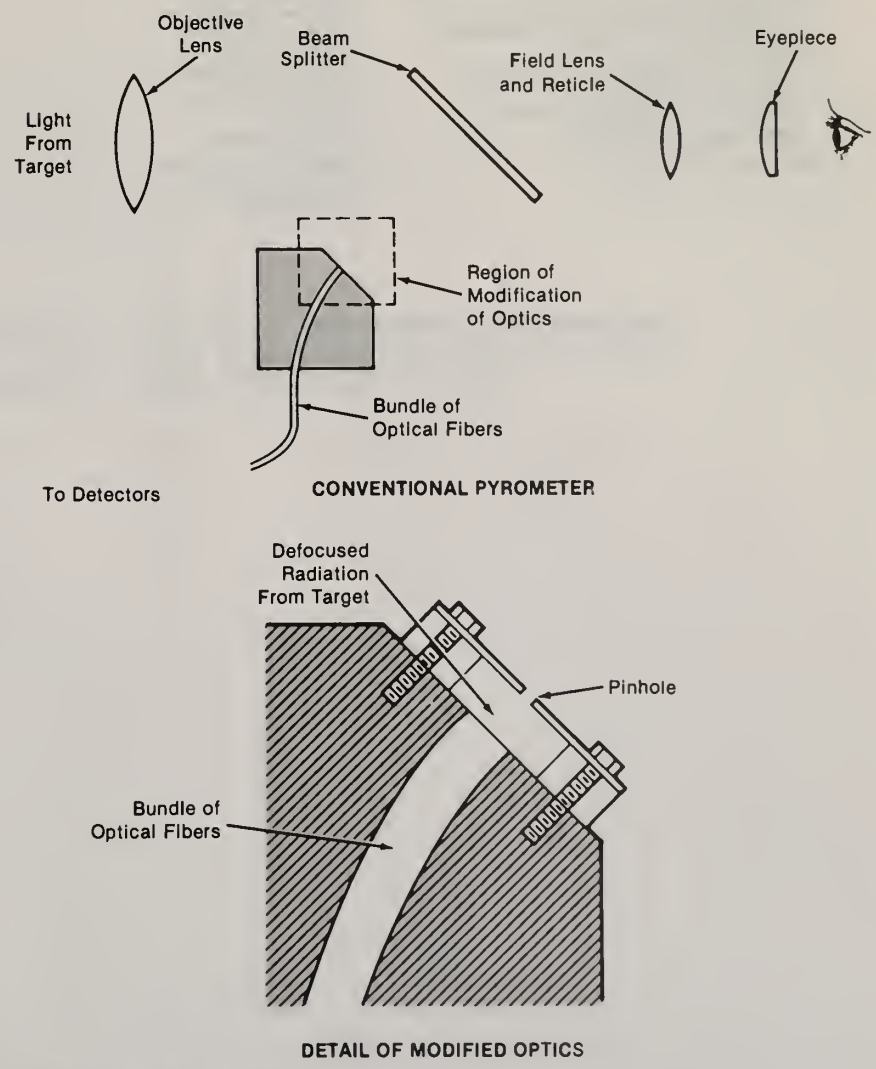

A Pinhole in a Sheet distributes light from a distant hot source over the flat end surface of a bundle of optical fibers. The plate lies 0.1 in. (2.54 mm) away from the bundle, which is 0.032 in. (0.81 mm) in diameter.

This work was done by Donald B. Bickler, Paul K. Henry, and D. Daniel LoGiurato of Caltech for **NASA's Jet Propulsion Laboratory.**

In accordance with Public Law 96-517, the contractor has elected to retain title to this invention. Inquiries concerning rights for its commercial use should be addressed to

Edward Ansell
Director of Patents and Licensing
Mail Stop 301-6
California Institute of Technology
1201 East California Boulevard
Pasadena, CA 91125

Refer to NPO-17287/TN.

Jet Propulsion Lab.
NASA Resident Office
Technology Utilization Officer: Gordon S. Chapman
Mail Stop 180-801
4800 Oak Grove Drive
Pasadena, CA 91109
(818) 354-4849
Patent Counsel: Paul F. McCaul
Mail Code 180-801
4800 Oak Grove Drive
Pasadena, CA 91109
(818) 354-2734
Technology Utilization Mgr. for JPL: Norman L. Chalfin
Mail Stop 156-211
4800 Oak Grove Drive
Pasadena, CA 91109
(818) 354-2240

FOR ADDITIONAL INFORMATION: *Contact: Director, Technology Transfer Division, P.O. Box 8757, BWI Airport, MD 21240; (301) 621-0100 Ext. 241*

REFER TO THE NUMBER LISTED AT THE END OF THIS ARTICLE

Transportation & Components

0306 Interaction of a Helicopter Blade With a Vortex—Measurements in a wind tunnel yield data for validation of computations.

NASA Tech Brief
National Aeronautics and
Space Administration

Interaction of a Helicopter Blade With a Vortex

Measurements in a wind tunnel yield data for validation of computations.

A report describes an experimental investigation of the three-dimensional interaction of a helicopter rotor blade with a vortex like that generated by the preceeding rotor blade. The report provides theoretical aerodynamicists with data for validation of computer simulations of aerodynamic flow.

The investigation was carried out in a wind tunnel in which a vortex-generating blade was mounted vertically, and the blade under test was mounted horizontally downstream. A three-dimensional laser velocimeter measured the velocity field around the horizontal blade. Measurements of the velocity of circulation around the blade were used to calculate the spanwise distribution of lift on the blade. Mean flow velocities were measured over grids upstream of the blade. Variations of the strength and position of the vortex and of the angle of attack of the blade were examined.

The report describes the test configurations and instrumentation. It tabulates and discusses measured data. Finally, it describes and quantifies such sources of error as the effects of walls, deflections of the blade with changes in lift, unsteadiness in the position of the vortex, and instrumentation-related errors.

This work was done by Stephen Dunagan and Thomas Norman of **Ames Research Center**. *Further information may be found in NASA TM-100013 [N88-14962], Price Code: A03 "Lift Distribution and Velocity Field Measurements for a Three-Dimensional, Steady Blade/Vortex Interaction."*

Copies may be purchased from the National Technical Information Service, Springfield, Virginia 22161, Telephone No. (703) 487-4650. Rush orders may be placed for an extra fee by calling (800) 336-4700.
ARC-12196/TN

FOR ADDITIONAL INFORMATION: *Contact: Director, Technology Transfer Division, P.O. Box 8757, BWI Airport, MD 21240; (301) 621-0100 Ext. 241*
REFER TO THE NUMBER LISTED AT THE END OF THIS ARTICLE

U.S. DEPARTMENT OF COMMERCE
National Technical Information Service
Springfield, VA 22161

NTIS ORDER FORM

Use this form ONLY to order reports designated as available from NTIS.

TELEPHONE ORDERS (703) 487-4650 FAX (703) 321-8547 TELEX 89-9405

If your address lable on this Tech Notes is NOT correct, call the NTIS Subscriptions Department on (703) 487-4630.

For Subscription Questions
(703) 487-4630

For Tracing an Order
(703) 487-4660

For Editorial Questions
(703) 487-4805

Postage:
NTIS uses First Class Delivery, or equivalent service, on all shipping. For information about one day RUSH ordering, call (800) 336-4700 or (703) 487-4700.

NTIS PRICE SCHEDULE *

This schedule converts into actual prices the price codes cited in those Tech Notes having a report available from NTIS.

Price Code	*Price*
A01	$8.00
A02	11.00
A03	15.00
A04 through A05	17.00
A06 through A09	23.00
A10 through A13	31.00
A14 through A17	39.00
A18 through A21	45.00
A22 through A25	53.00
A99	Contact NTIS for price

These prices are for customers in United States, Canada, and Mexico. Other addresses should write for the price listing, number PR-360-4.

Prices effective January 1, 1990

† Purchase Order Service: There is a $7.50 charge for this service. It is restricted to customers in the United States, Canada, and Mexico. A late payment charge will be applied to all billings more than 30 days overdue.

1 ADDRESS INFORMATION

Last Name .....

Title .....

Company/Organization .....

Address .....

.....

City/State/ZIP .....

Telephone Number .....

2 METHOD OF PAYMENT

☐ Charge my NTIS Deposit Account .... – .....

☐ Check/Money order enclosed payable to NTIS for $ .....

☐ Purchase order **ADD $7.50 per order** (see below for restrictions)†

Purchase order number .....

Charge my ☐ American Express ☐ VISA ☐ MasterCard

Account Number ..... Exp. .....

Signature .....
(Required to validate order)

3 ORDER SELECTION (Use only for reports stated as available from NTIS)

NTIS Order Number	*Price**	*Quantity*	*Total Price*
..... /NAC	.....	.....	.....
..... /NAC	.....	.....	.....
..... /NAC	.....	.....	.....
..... /NAC	.....	.....	.....
..... /NAC	.....	.....	.....

Handling fee ... $3.00

Total .....

- Agriculture & Food
- Computers
- Electrotechnology
- Energy
- Engineering
- Environmental Science & Technology
- Manufacturing, Machinery, & Tools
- Materials
- Medicine & Biology
- Natural Resources Technology & Engineering
- Physical Sciences
- Transportation & Components

Route To:

PENN STATE UNIVERSITY LIBRARIES
A000072010181

DEPARTMENT OF COMMERCE
nal Technical Information Service
field, Va. 22161

—

AL BUSINESS
, for Private Use, $300

AN EQUAL OPPORTUNITY EMPLOYER

BULK RATE
POSTAGE & FEES PAID
NTIS
Permit No. G-292